INFORMATION FOR FIRST AND SECOND RESPONDERS

EMERGENCY RESPONSE GUIDE FOR VEHICLE

XFORCE

for HEV

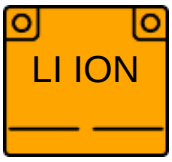

2026 Model year -

Version:1.0

Introduction

This manual provides safety instructions that need to be followed when rescuing the passengers from the vehicle after an accident and describes how to handle the damaged vehicle.

Failure to follow these instructions and especially the warnings and cautions may result in serious injury such as an electrical shock due to the high voltage battery installed on XFORCE (HEV).

Please read and understand this manual carefully for your and the passengers safety.

Throughout this manual the words **WARNING** AND **CAUTION** appear.
These serve as reminders to be especially careful. Failure to follow instructions could result in personal injury or damage to your vehicle.

WARNING

Indicates a strong possibility of severe personal injury or death if instructions are not followed.

CAUTION

Means hazards or unsafe practices that could cause minor personal injury or damage to the vehicle.

NOTE

Gives helpful information.

*: indicates optional equipment.
It may differ according to the sales classification; refer to the sales catalogue.

Mitsubishi Motors reserves the right to make changes in design and specification and/or to make additions to or improvements in this product without obligation to install them on products previously manufactured.

- Please note that the contents of this manual may differ with the actual vehicle due to vehicle specification changes.

CONTENTS

0.Rescue sheet(s)	P.3
1.Identification / recognition	P.4
2.Immobilisation / stabilization / lifting	P.9
3.Disable direct hazards / safety regulations	P.13
4.Access to the occupants	P.20
5.Stored energy / liquids / gases / solids	P.24
6.In case of fire	P.26
7.In case of submersion	P.29
8.Towing / transportation / storage	P.31
9.Important additional information	P.34
10.Explanation of pictograms used	P.51

0. Rescue sheet(s)

MITSUBISHI XFORCE (HEV)
5 doors / 5 seats / Wagon
(2025 -)

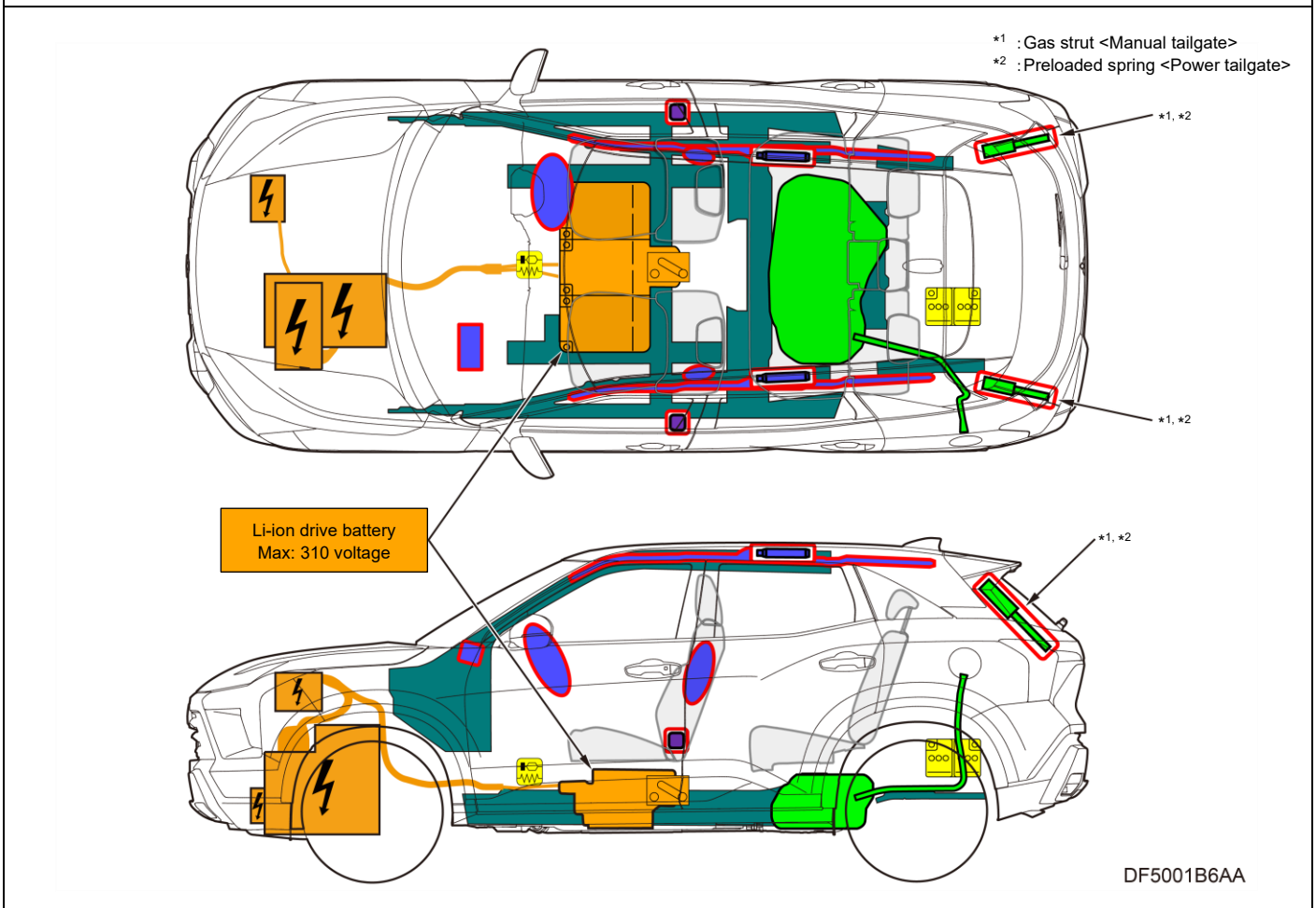

	Airbag		Stored gas inflator		Seat belt pretensioner		SRS control unit		Pedestrian protection active system
	Automatic rollover protection system		Gas strut / Preloaded spring		High strength zone		Zone requiring special attention		
	Battery low voltage		Ultra capacitor, low voltage		Fuel tank		Gas tank		Safety valve
	High voltage battery pack		High voltage Power cable component		High voltage disconnect		Fuse box disabling high voltage system		Ultra capacitor, high voltage

ID No.	Version No.	Version Date.	Page
GEW-TNRS-EN01	01	1/2025	1

© MITSUBISHI MOTORS CORPORATION. All rights reserved.

1. Identification / recognition

1. Features on vehicle exterior

CAUTION:

Lack of engine noise does not mean vehicle is off: silent movement or instant restart capability exists until vehicle is fully shut down. Wear appropriate Personal Protective Equipment (PPE).

If you find any of the following features which can identify XFORCE (HEV), always wear appropriate Personal Protective Equipment (PPE).

WARNING:

Use insulating Personal Protective Equipment (PPE) (Rubber insulating gloves, Rubber soled insulating shoes: rated to a minimum of 310 V voltage resistance), when contact with the vehicle body is possible.

(1) Feature list

XFORCE (HEV) can be identified by the "HYBRID EV" mark and chassis number (model code).
The "HYBRID EV" mark is installed on the left and right sides of the door panel and on the radiator grille and tailgate.

(2) Features on exterior

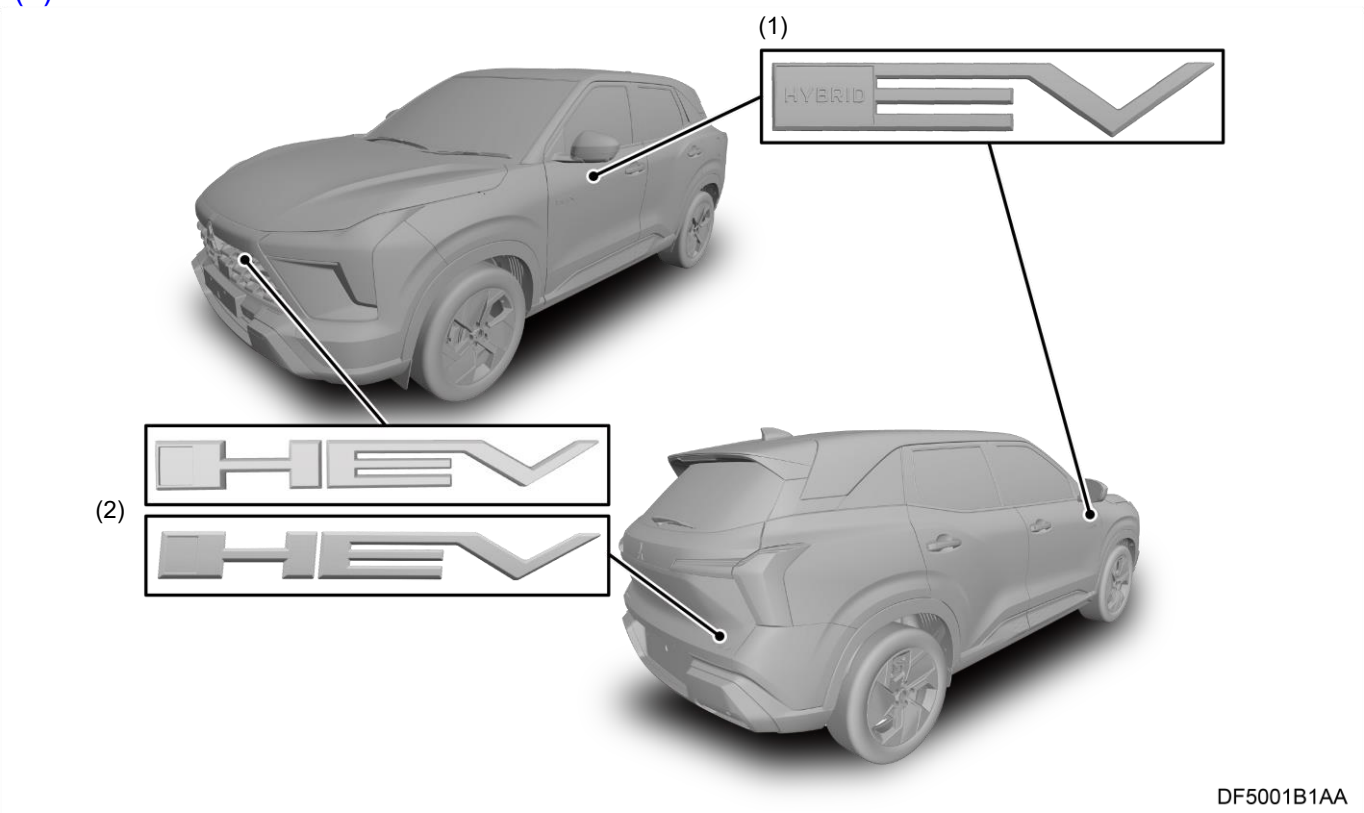

(1) "HYBRID EV" mark on the left and right sides of the door panel
(2) "HEV" mark on the front bumper grille and tailgate

(3) Features on other areas

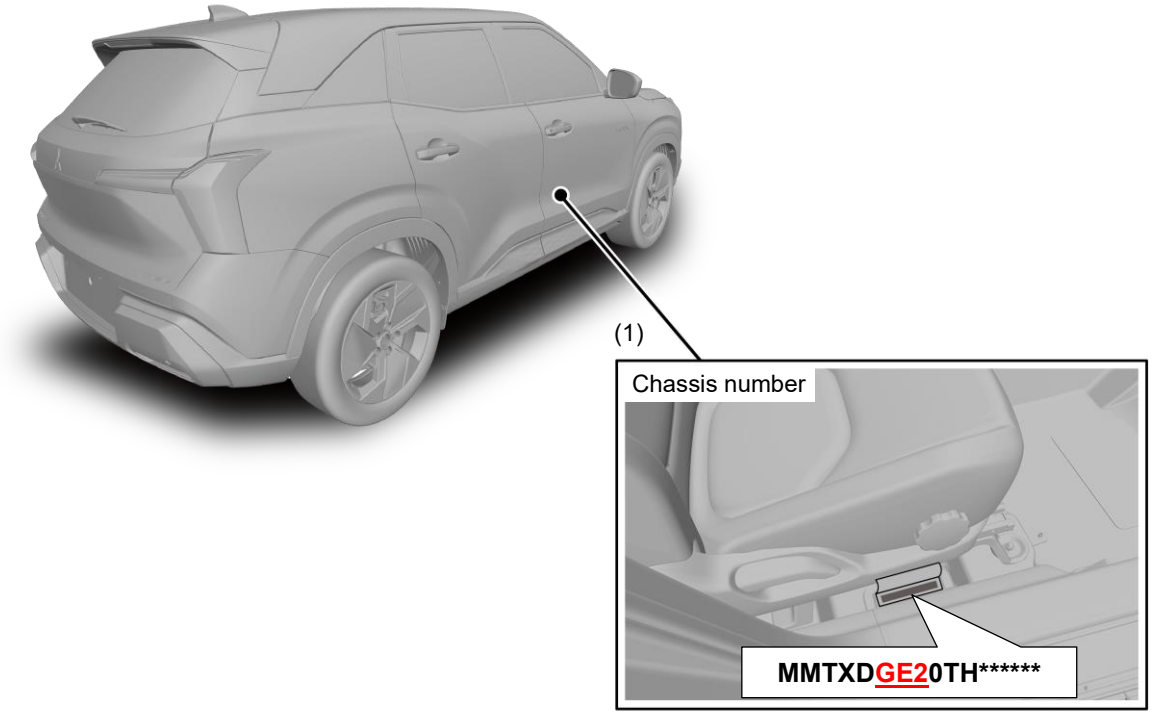

DF5001DWAA

(1) “Chassis number” stamped on the floor under the right side of the front seat

2. High voltage wiring cable location

High voltage wiring cables are located as shown in the figure below.

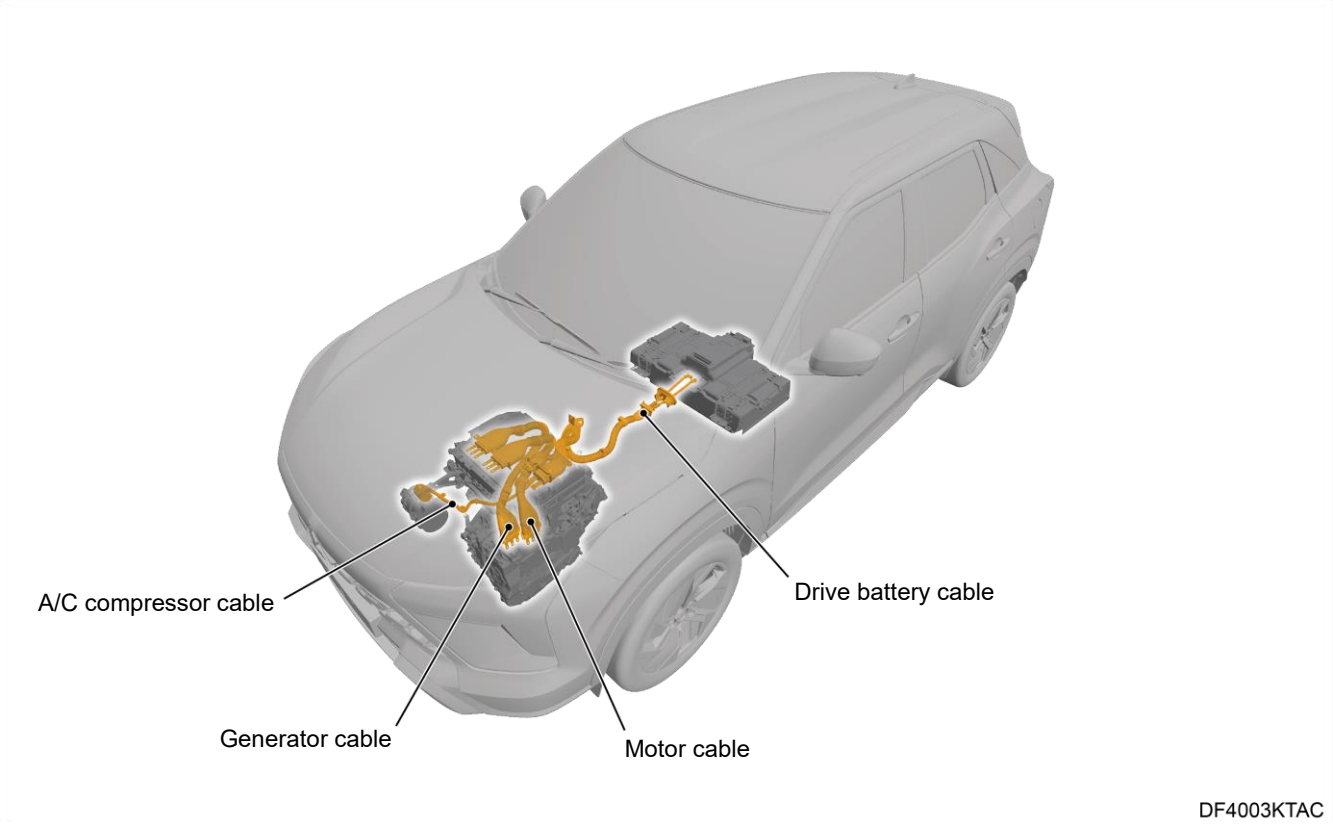

*: Refer to “10. Explanation of pictograms used”

3. SRS air bag component location

SRS air bags system (location of air bags and related components) are located as shown in the figure below.

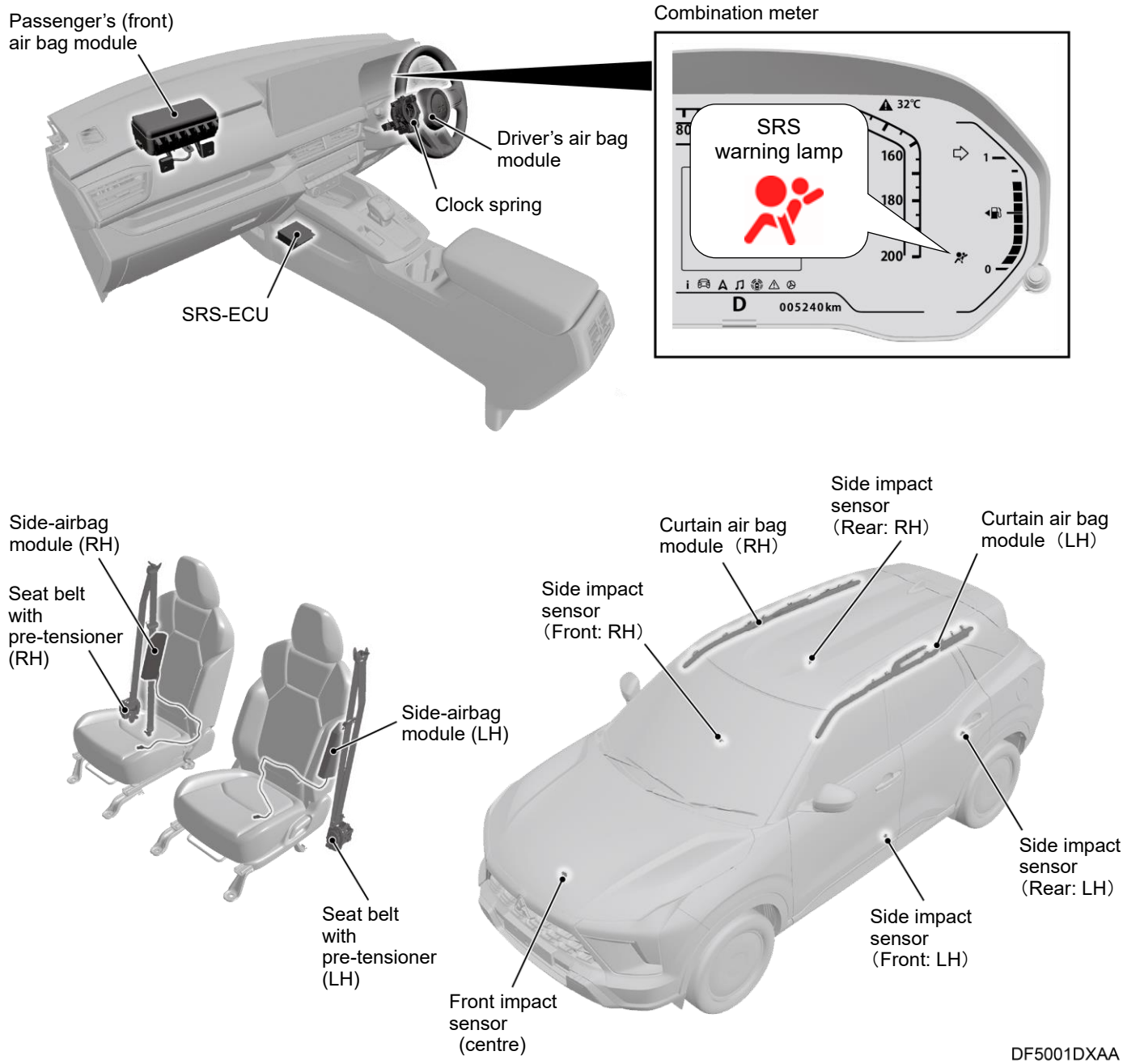

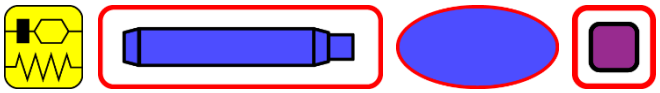

*: Refer to "10. Explanation of pictograms used"

4. Vehicle dimensions

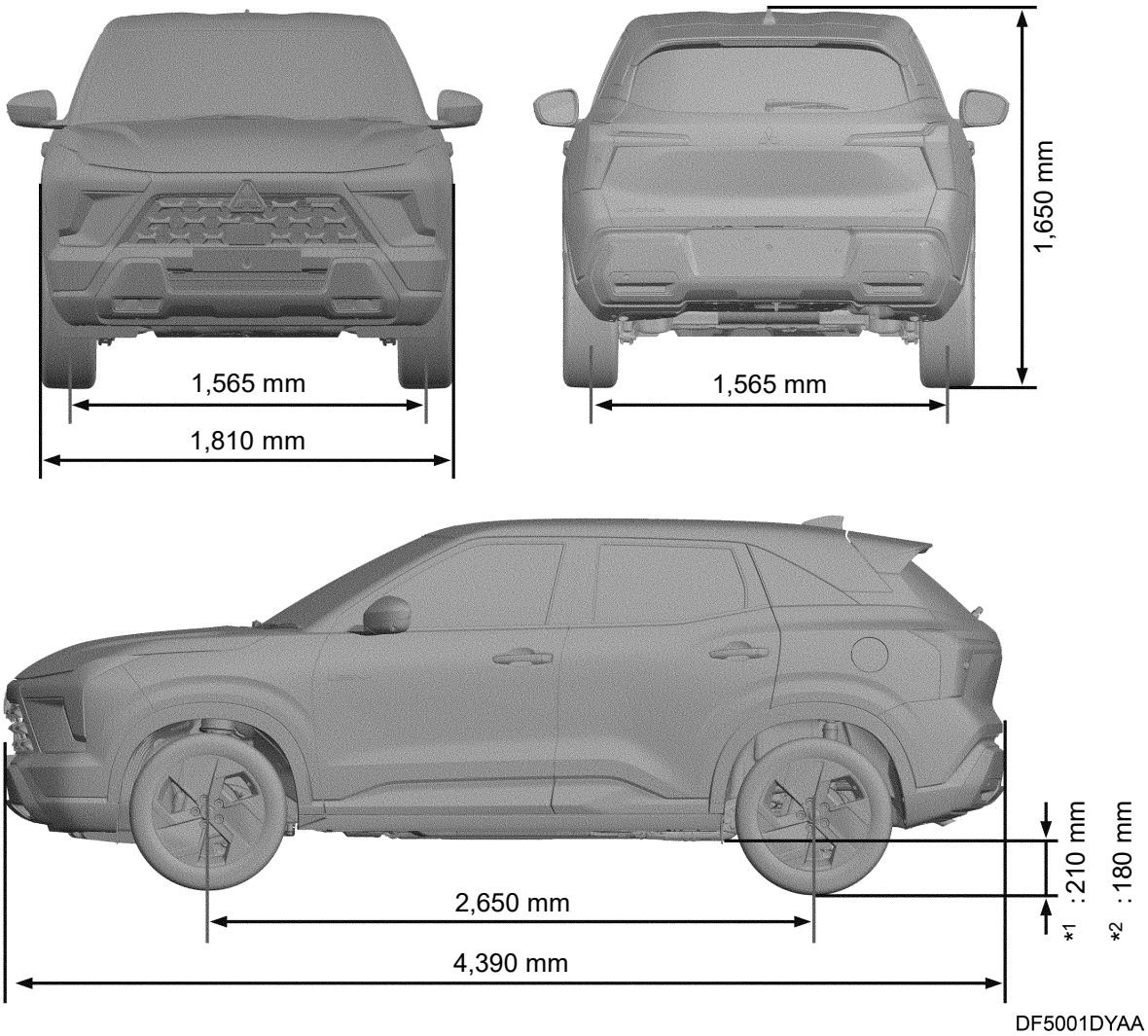

Vehicle weight 1,400 – 1,420kg*3

*1 : Without under cover

*2 : With under cover

*3 : Differs on the model, the vehicle weight will change.

2. Immobilisation / stabilization / lifting

1. How to determine if vehicle is ON / OFF

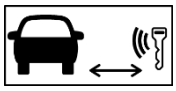

The operating range of the keyless operation key is limited to the interior of the vehicle.

OFF

Check that the illumination of the "power switch" and "combination meter" is off.

ON

All vehicle's electrical devices can be operated.
The indicator lamp on the power switch illuminates blue. The indicator lamp turns off when the Hybrid EV System is operating.
If you press the power switch without depressing the brake pedal, you can change the operation mode of the power switch in the order of OFF, ACC, ON, OFF.

READY Indicator

The READY indicator keeps blinking until the Hybrid EV System is activated.
When the Hybrid EV System has activated normally and the vehicle becomes ready to run, the indicator stops blinking and stays displayed. If the indicator keeps blinking, the vehicle cannot drive.

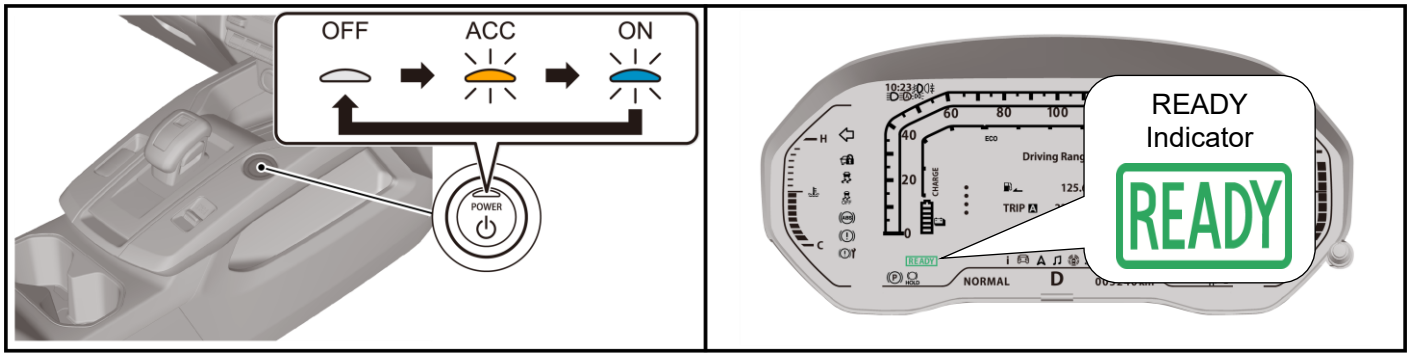

DF5001ECAA

2. Support positions for Jack and Lift

CAUTION:

Be sure to support the specified locations only. Otherwise, damage of vehicle may occur.

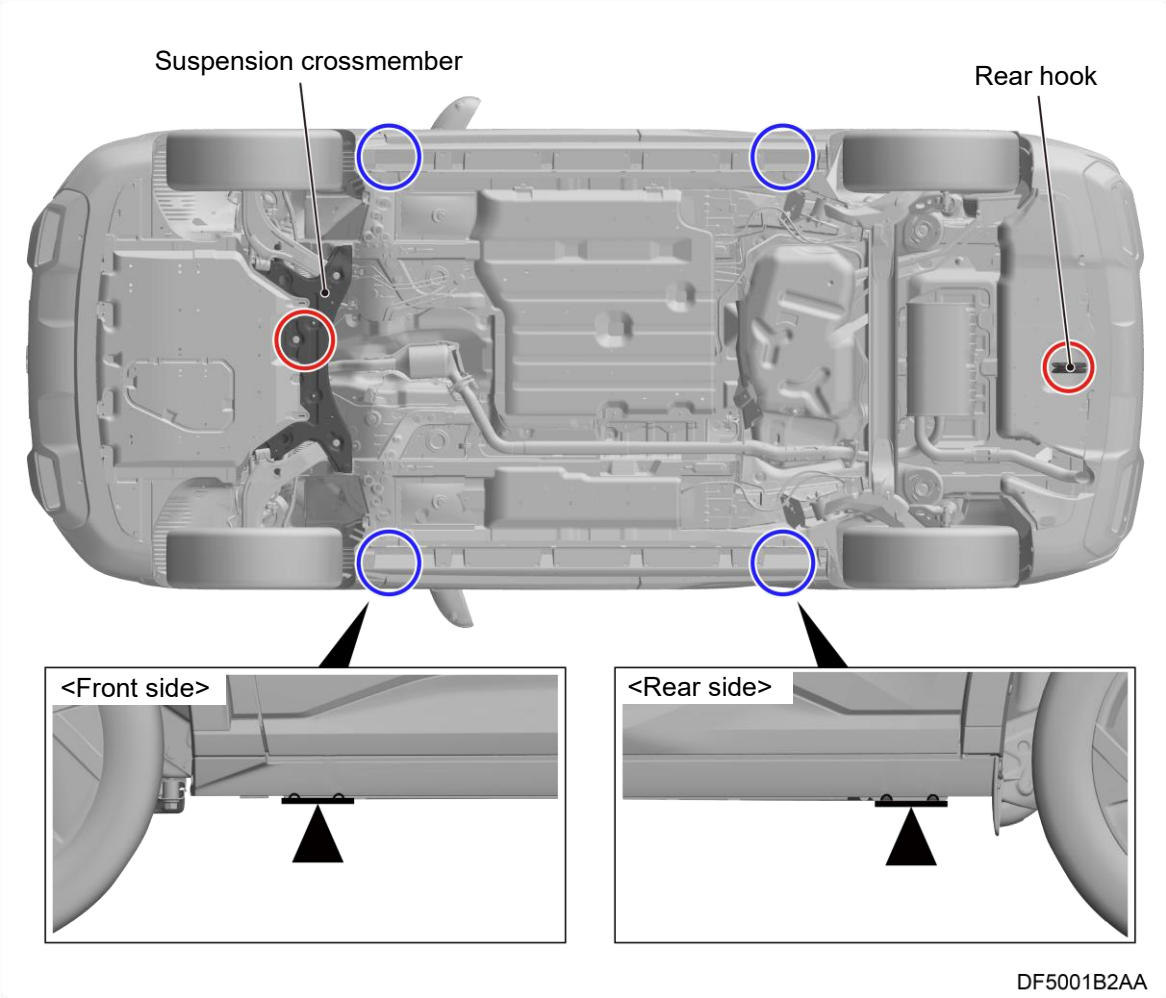

○: Support position for Garage Jack ○: Support position for Jack or Axle stands or Lift

3. Vehicle Immobilization and Stabilization

WARNING:

- To apply the electric parking brake, press the brake pedal firmly to completely stop the vehicle and pull up the switch.
- When installing a “block” or “lift air bag device”, avoid high voltage parts, exhaust systems and fuel systems, etc.
  If high voltage components or high voltage wiring cables are exposed, do not place any support on them.
  It may cause damage or fire for vehicle.

NOTE:

When the 12V auxiliary battery is weak or dead, or the battery terminal is disconnected, the electric parking brake cannot be applied or released.

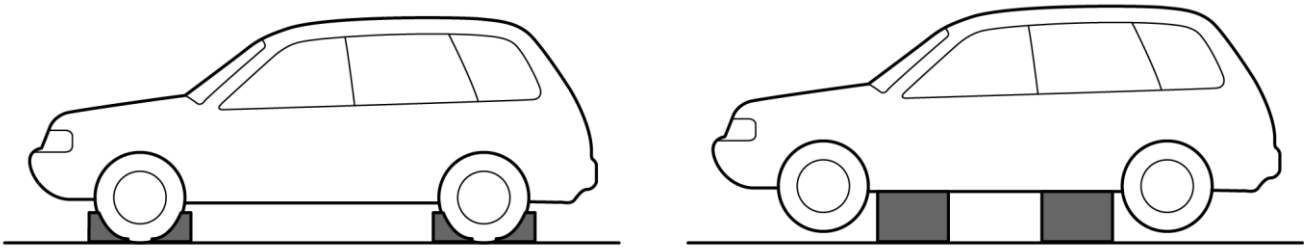

NE0040EEM0

▪Immobilization with wheel chocks

Park the vehicle and press the electric parking switch.

Pull up the electric parking brake switch while depressing the brake pedal, check that the indicator lamp on the electric parking brake switch will come on.

Once the wheels are locked, lock the vehicle with the wheel chocks.

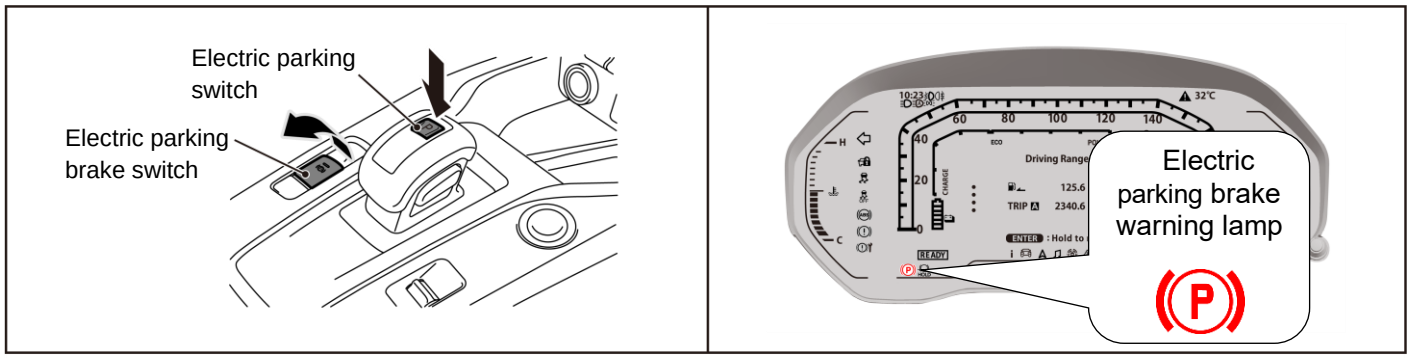

DF5001EDAA

▪Stabilize with block

To stabilize the vehicle, place a support such as a block for under the vehicle and release air from tyres to stabilize the vehicle.

When fixing the vehicle to the foundation, use the designated position of the jack.

Stabilization method for a rollover or overturned vehicle

WARNING:

- Use supports with enough strength.
- When installing prop tools, avoid exhaust systems, fuel systems, high voltage parts, high voltage wiring cables, etc.
- If the inside of the high voltage components or the high voltage wiring cable is exposed, avoid the exposed parts when installing.

･Stabilization method for prop tools of rollover vehicle

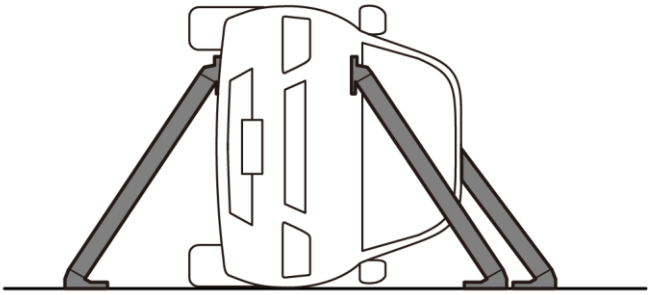

NE0073EJM0

Please support the prop tools on the vehicle roof or the vehicle bottom. Depending on the situation, support the prop tools with 2, 3, or 4 to stabilize it.

･Stabilization method using blocks, etc. of rollover vehicle

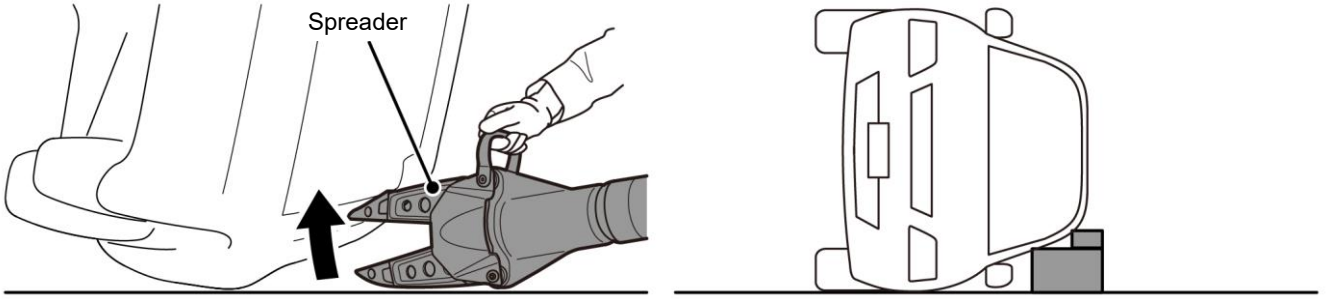

NE0072EJM0

To upright the vehicle, use a spreader or jack, etc., and place supports such as blocks in the gap to stabilize it.

･Stabilization method using wheel stoppers, blocks, props, etc. of overturned vehicle

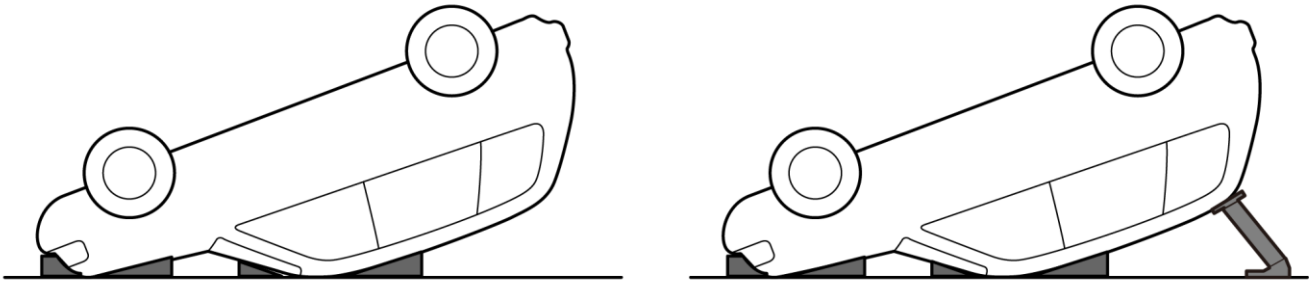

NE0076EJM0

Blocks or wheel stoppers are set up in the gap between the hood and pillars to stabilize the vehicle.
To increase the stability, place a column at the rear of the vehicle (a strong place) to stabilize it.

3. Disable direct hazards / safety regulations

NOTE:

Disconnecting the 12V auxiliary battery may make it impossible to perform operations related to electrical components. Perform the necessary operations before removing the 12V auxiliary battery terminal.

XFORCE (HEV) is equipped with a lithium-ion battery of max. voltage 310 V. This is used to activate the electric motor unit and some components such as air conditioning.
Before rescue work can begin, it is necessary to ensure "isolation" and "cut off" from the high voltage circuit in order to prevent the risk of electric shock before handling the vehicle.
Drive battery specification is **"1.1 kWh lithium-ion, 259 V"**. Drive battery's maximum voltage capacity is **310 V** when the drive battery is being charged.

CAUTION:

Silence does not always mean that the hybrid system is turned off.
Ensure that the high voltage circuit is "isolated" or "cut off".

(1) Isolation from the high voltage circuit

1) The high voltage circuit is insulated from the vehicle body.
2) All of high voltage components are covered up by cases and covers.
   Note that high voltage wiring cables can be distinguished from normal wiring harness by their orange coloured insulation.
3) The cases and covers are insulated from the high voltage circuit inside.

(2) Disconnection of the high voltage circuit

The high voltage circuit will be isolated by removing the service plug.

(3) Precautions when rescuing passengers

WARNING:

Failure to follow these instructions may result in serious injury such as electric shock:
(1) This vehicle is equipped with a high voltage system of max operation voltage 310 V.
(2) The possibility of a high volume electrolyte leak as a result of the drive battery damage is reduced by the design inside the drive battery.
(3) Drive battery uses an electrolyte made of flammable "Carbonate ester solution of lithium salts".
When reacting with moisture in the air, this electrolyte generates acidic organic vapour which is harmful to human body. Therefore, when handling this, please use appropriate Personal Protective Equipment (PPE) including mask for organic gas, solvent resistance gloves and eye protector and use appropriate caution.
(4) The high voltage circuit is always active regardless of the power supply mode of the power switch.

NOTE:

Disconnecting the 12V auxiliary battery may make it impossible to perform operations related to electrical components. Perform the necessary operations before removing the 12V auxiliary battery terminal.

1. Electric power windows / Door lock

Power windows

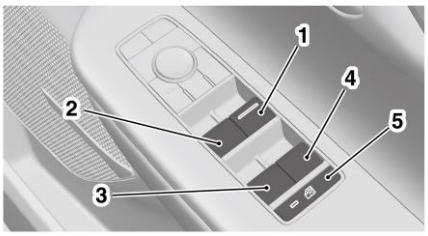

DF5001EGAA

1 – Driver's door window
2 – Front passenger's door window
3 – Rear left door window
4 – Rear right door window
5 – Window lock switch

Door lock

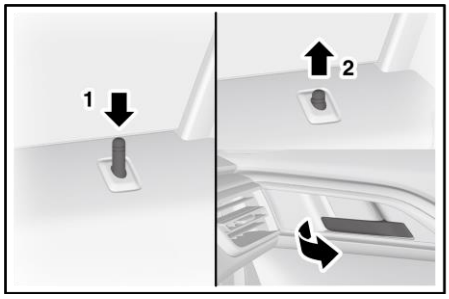

DF5001EHAA

1 – Lock
2 – Unlock

2. How to apply and release the parking brake

・To apply

1) Stop the vehicle completely.
2) Pull up the electric parking brake switch while depressing the brake pedal.
3) When the parking brake is applied, the electric parking brake warning lamp (red) in the instrument cluster will come on.

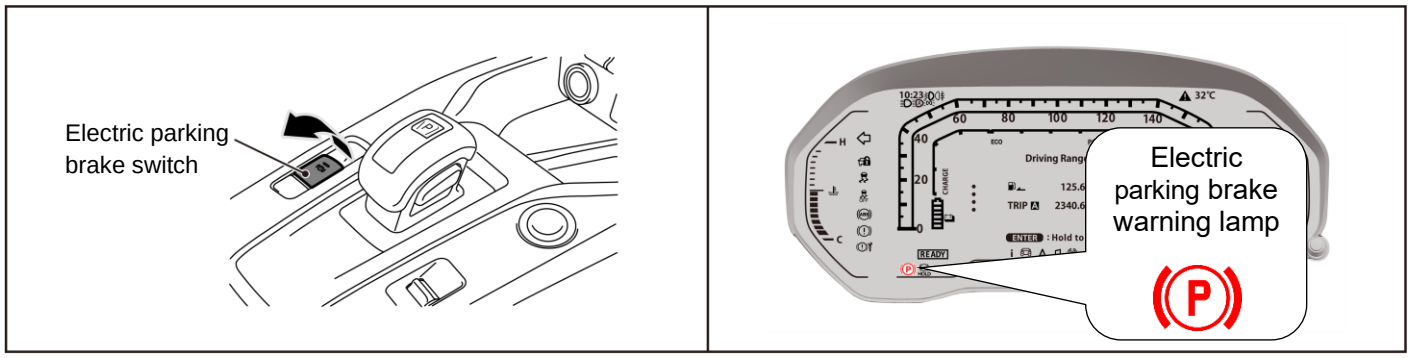

DF5001EEAA

Make sure that the electric parking brake warning lamp (red) in the combination meter and the indicator lamp in the switch are lit.

CAUTION:
When applying the electric parking brake, stepping on the brake pedal firmly, stop completely the vehicle, and then pull up the switch.

・To release

Manual operation

1) Make sure that the power supply mode of the power switch is ON.
2) Press down the electric parking brake switch while depressing the brake pedal.
   When the parking brake is released, the electric parking brake warning lamp (red) go off.

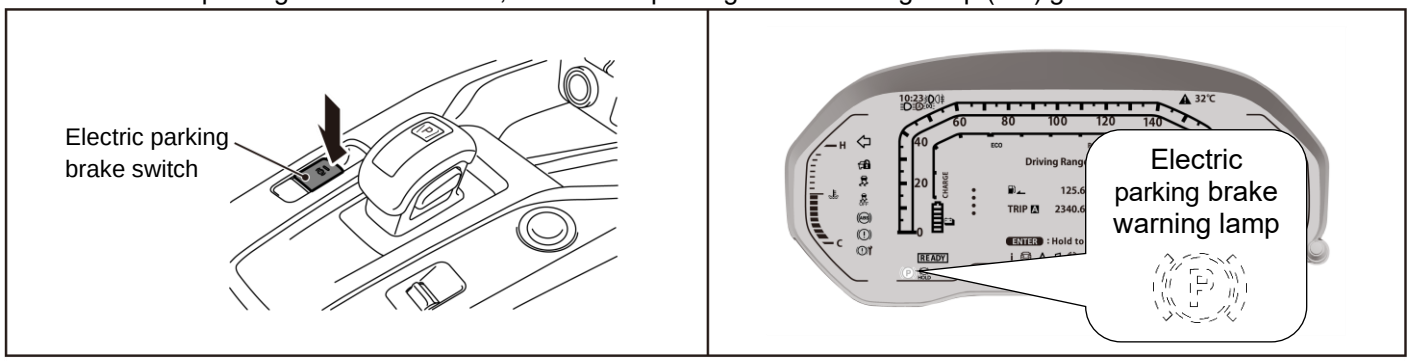

DF5001EFAA

Automatic operation

When the accelerator pedal is depressed slowly while all of the following conditions are met, the electric parking brake is automatically released.

- The Hybrid EV System is operating.
- The select position is in the “D” (DRIVE) or the “R” (REVERSE) position.
- The driver’s seat belt is fastened.

3. How to open hood

1) Pull the release lever towards you to unlock the hood.
2) Raise the hood while pressing the safety lock.
3) Support the hood by inserting the support bar in its slot.

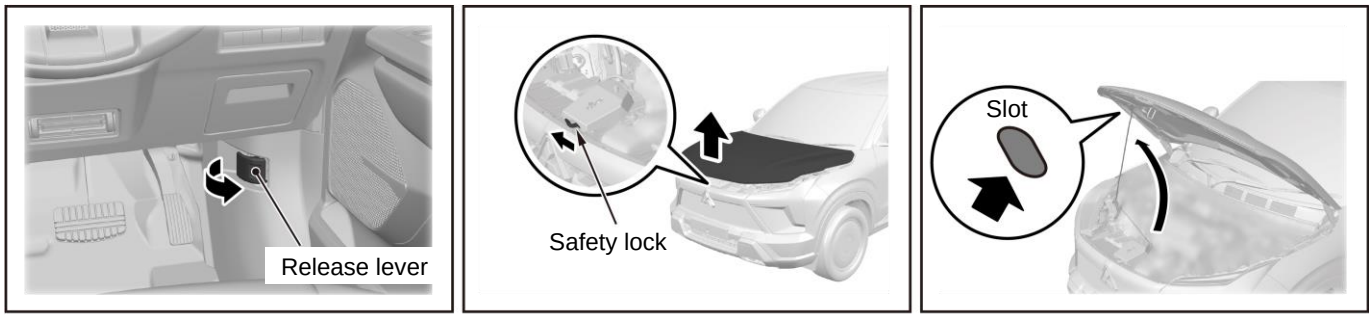

DF5001EIAA

4. How to open tailgate
<Manual tailgate>

After unlocking the tailgate using central door lock switch (driver side), push the tailgate opener switch and pull up the tailgate. To close the tailgate, pull the tailgate grip downward and release it before the tailgate is completely closed, then gently close the tailgate from the outside.

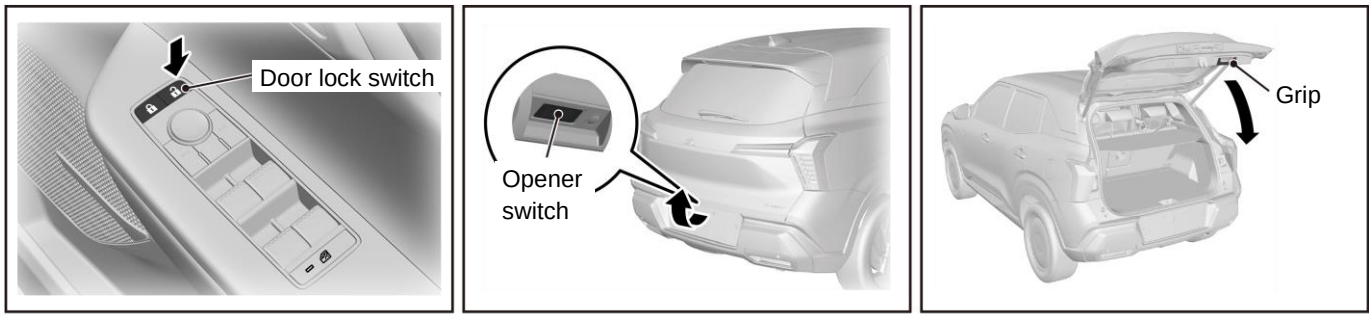

DF5001EJAA

▪To open from inside

The inside tailgate release is designed to provide a way to open the tailgate in the case of a discharged 12V auxiliary battery.

1) Using a tool, open the lid inside of the tailgate.
2) Move the lever to unlock the tailgate.
3) Push the tailgate to open it.

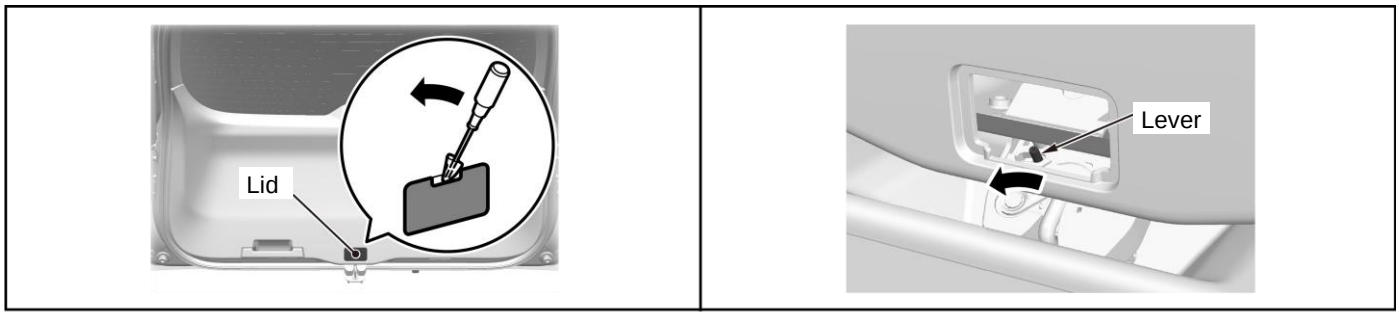

DF5001EKAA

<Power tailgate>

• Operating the power tailgate using the inside power tailgate switch

Pushing the power tailgate switch (A) on more than 1 second.

If the switch is pushed while the power tailgate is being opened or closed, the power tailgate will stop.

Pressing the power tailgate switch (A) again to open or close.

• Opening the power tailgate using the tailgate opener switch

Power tailgate can be auto opened by pressing the tailgate opener switch (B).

The power tailgate can be closed by pressing the power tailgate close switch (C) on the inside of the power tailgate.

If the switch is pushed while the tailgate is being opened or closed, the tailgate will stop.

Pressing the tailgate opener switch (B) or power tailgate close switch (C) again to open or close.

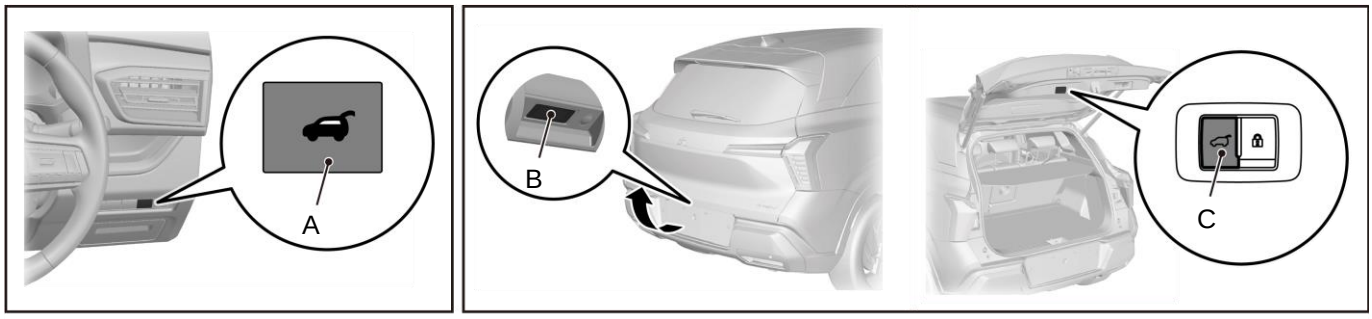

DF5001ELAA

• Operating the power tailgate using the keyless operation key

Pushing the power tailgate button (A) on more than 1 second.

- While closed: The tailgate completely opens.
- While open: The tailgate completely closes.

If the button is pushed while the tailgate is being opened or closed, the tailgate will stop.

Pressing the button (A) again to open or close.

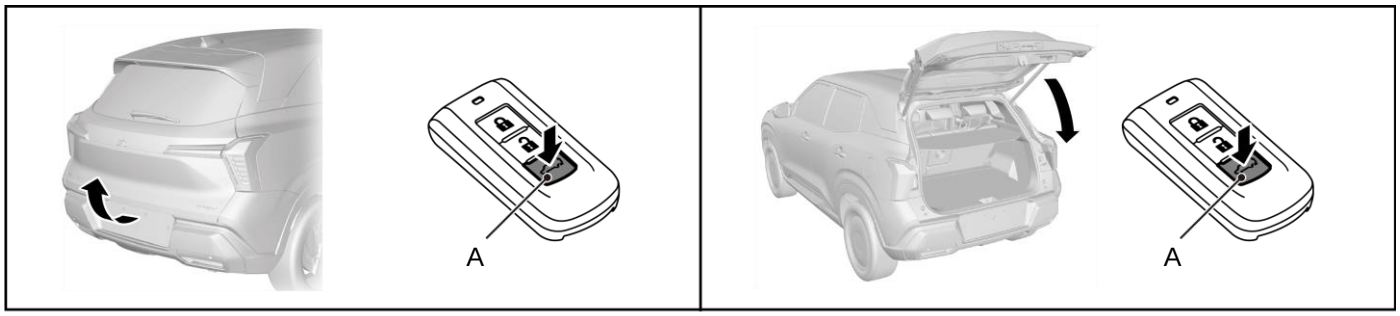

DF5001EMAA

・Operating the power tailgate using the hands-free access

NOTE;

The kick motion sensor will not respond unless you carry a keyless operation key.

The kick motion sensor (A), located on the back of the rear bumper, enables you to open or close the tailgate in hands-free.

When you move your foot under and away from the operating range (B) similarly to a kicking motion, the tailgate will open or close automatically.

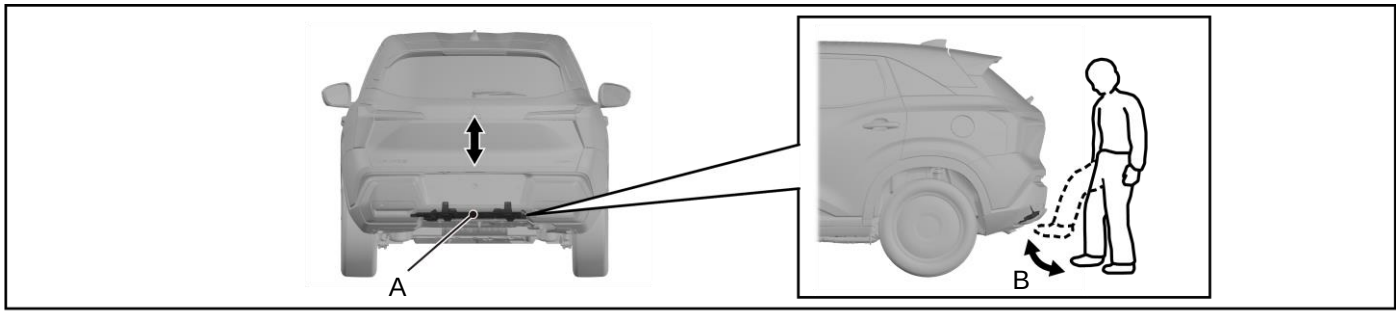

DF5001ENAA

The power tailgate will fully open automatically using the kick motion sensor (A).

1) Carry the keyless operation key.
2) Move your foot under and away from the rear bumper similarly to a kicking motion within the operation range of the kick motion sensor.
3) The tailgate will automatically open or close.
   ・While closed: The tailgate completely opens.
   ・While open: The tailgate completely closes.

If the kick motion while the tailgate is being opened or closed, the tailgate will stop.
It can be opened and closed again with kick motion.

・To open from inside

The inside tailgate release is designed to provide a way to open the tailgate in the case of a discharged 12V auxiliary battery.

4) Using a tool, open the lid inside of the tailgate.
5) Move the lever to unlock the tailgate.
6) Push the tailgate to open it.

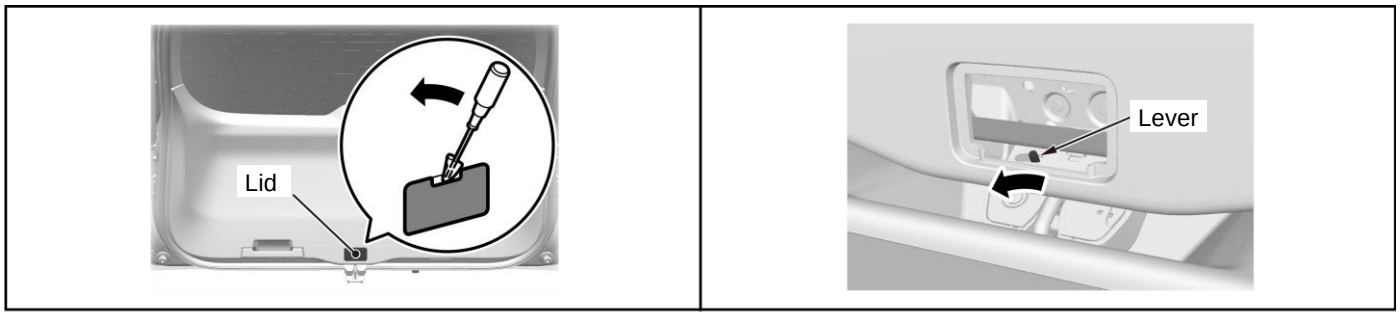

DF5001EOAA

5. How to disconnect the 12V auxiliary battery negative terminal

CAUTION:

The negative terminal disconnect for the 12V auxiliary battery should be 3 minutes later the power supply mode of the power switch is turned off.

3m

Use an open end wrench (10 mm) to disconnect the negative terminal of the 12V auxiliary battery according to the procedure below, and then wrap a plastic tape around the disconnected negative terminal.

Shut down the SRS air bag system circuit by disconnecting the negative terminal of the 12V auxiliary battery.

1) Lift the luggage floor board by pulling the strap upward.
2) Insert your hand in the gap and open the auxiliary battery cover.
3) Disconnect the auxiliary battery negative terminal.

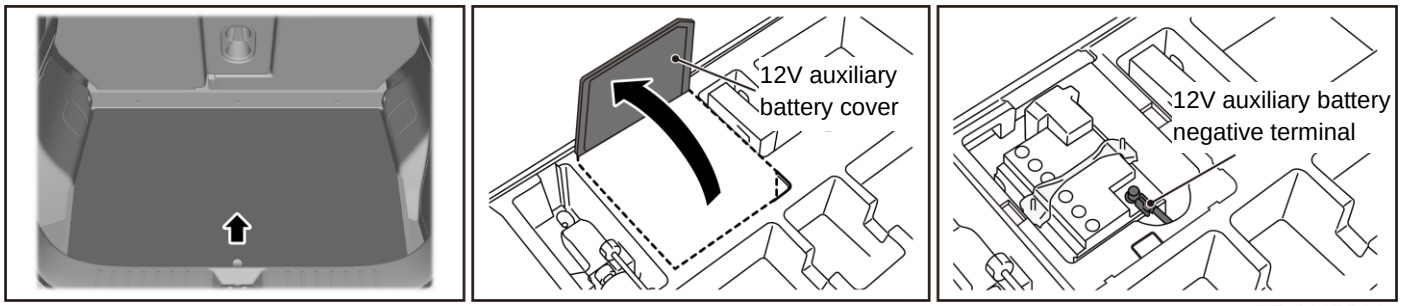

DF5001EPAA

6. How to disconnect the "Power unit control" fuse

Remove "Power unit control" fuse (15 A in the picture below) from the engine compartment fuse box.

If you cannot locate this fuse, remove all fuses and relays in the fuse box.

1) Press the tab of the fuse box cover.
2) Remove the fuse box cover.
3) Remove the "Power unit control" fuse (15 A).

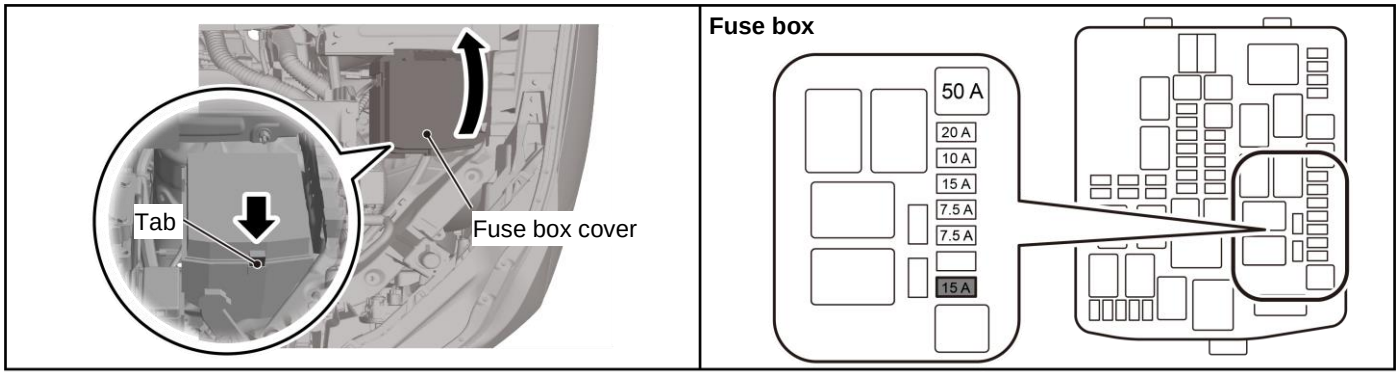

DF5001EQAA

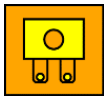

*: Refer to "10. Explanation of pictograms used"

7. How to shut down high voltage (pull out the service plug)

CAUTION:

Do not remove the service plug for 5 minutes later disconnecting the 12V auxiliary battery negative terminal.

5m

1) Wear Personal Protective Equipment (PPE) and observe the procedure below to remove the service plug.
   Pulling out the service plug will shut down the high voltage circuit in the drive battery.
2) Remove the floor console rear panel assembly and disconnect the connector.
3) Turn the floor carpet, and then remove the nut to remove the battery protector.
4) Remove the service plug cover.

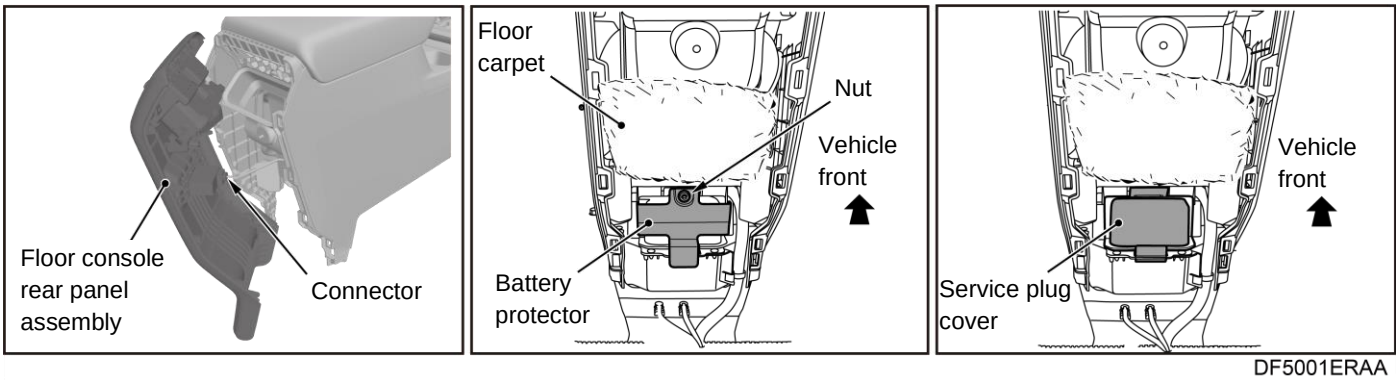

DF5001ERAA

WARNING:

Always wear Personal Protective Equipment (PPE) when pulling out the service plug.

5) Wear Personal Protective Equipment (PPE) and remove the service plug.
   1. Raise the service plug lever until it stops.
   2. Raise the service plug lever while releasing the lever lock of the service plug.
   3. Pull out the service plug.

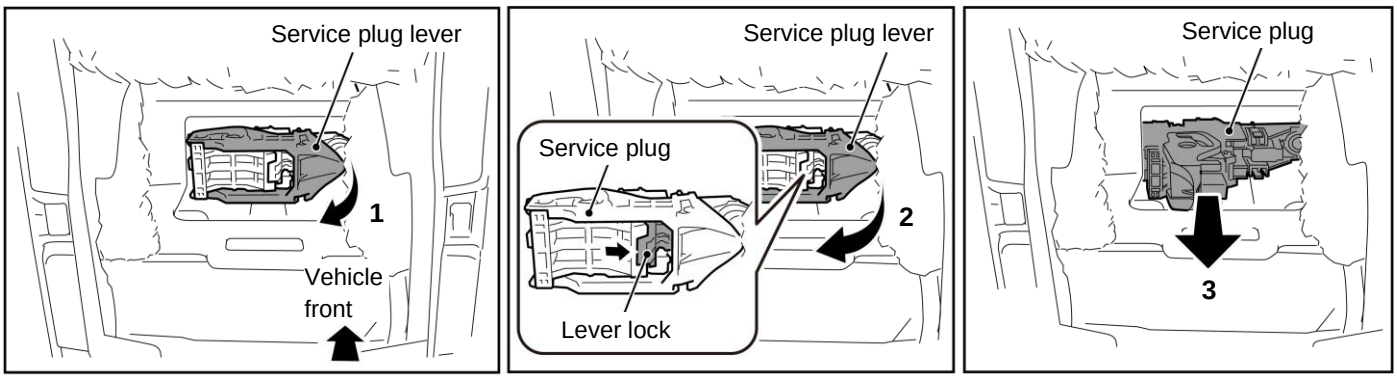

DF5001ESAA

*: Refer to “10. Explanation of pictograms used”

4. Access to the occupants

Failure to follow these instructions when performing a rescue may result in serious injury such as electric shock.
Do not touch high voltage wiring cable or components. Isolate high voltage circuits as necessary.

NOTE:

Disconnecting the 12V auxiliary battery may make it impossible to perform operations related to electrical components. Perform the necessary operations before removing the 12V auxiliary battery terminal.

WARNING:

Use insulating Personal Protective Equipment (PPE) (Rubber insulating gloves, Rubber soled insulating shoes: rated to a minimum of 310 V voltage resistance) when you may touch the vehicle body directly or indirectly.

CAUTION:

- When the 12V auxiliary battery is disconnected or removed, do not close the tailgate. If you close it once, you cannot open it again.
- The electric parking brake system will also be inoperative when the 12V auxiliary battery is disconnected.

1. Windows

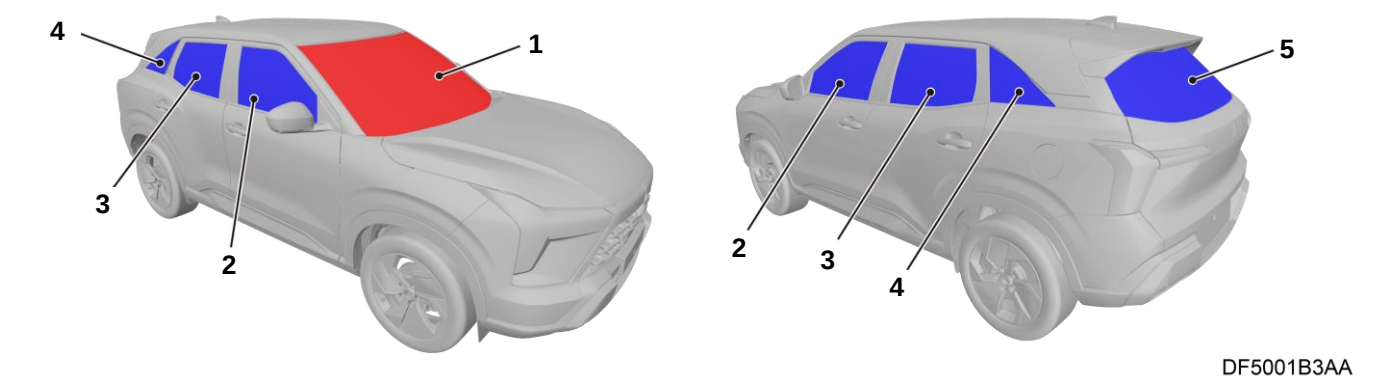

1: Laminated glass	2 – 5: Tempered glass

2. Adjustment seat and steering wheel

▪Seat

<Manual seat type>

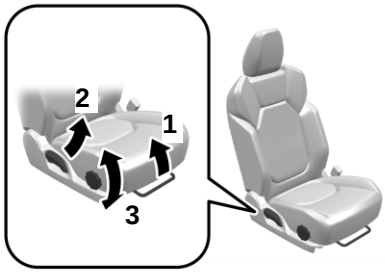

<Power seat type>

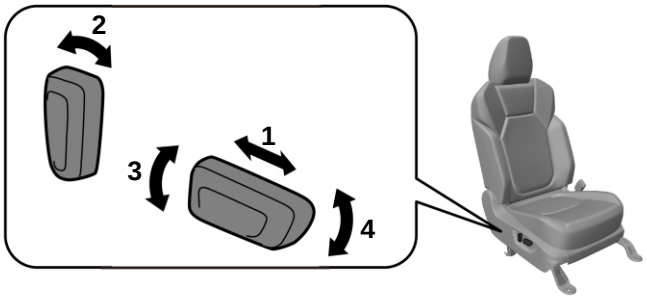

DF5001ETAA

1 : To adjust forward or backward 2 : To recline the seatback 3 : To adjust seat height (driver's side only)	1 : To adjust forward or backward 2 : To recline the seatback 3 : To adjust seat height 4 : To adjust seat cushion angle

*: Refer to "10. Explanation of pictograms

･Steering wheel

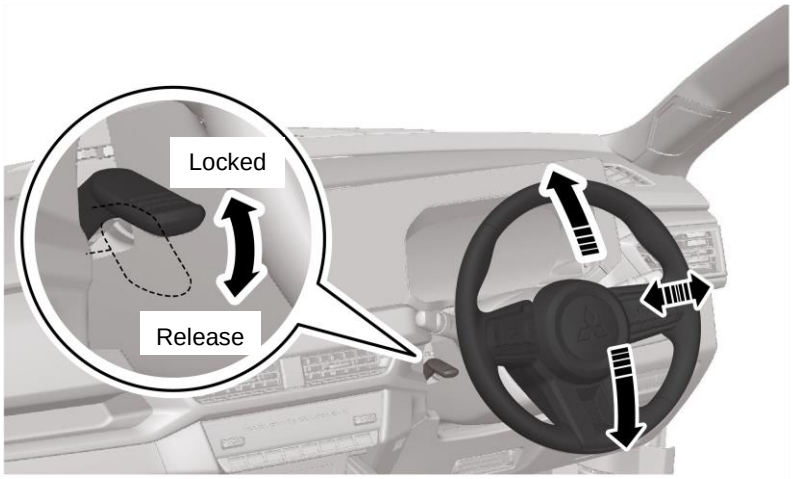

DF5001EUAA

*: Refer to “10. Explanation of pictograms used”

3. High-tensile and Ultra-high-tensile steel panels location

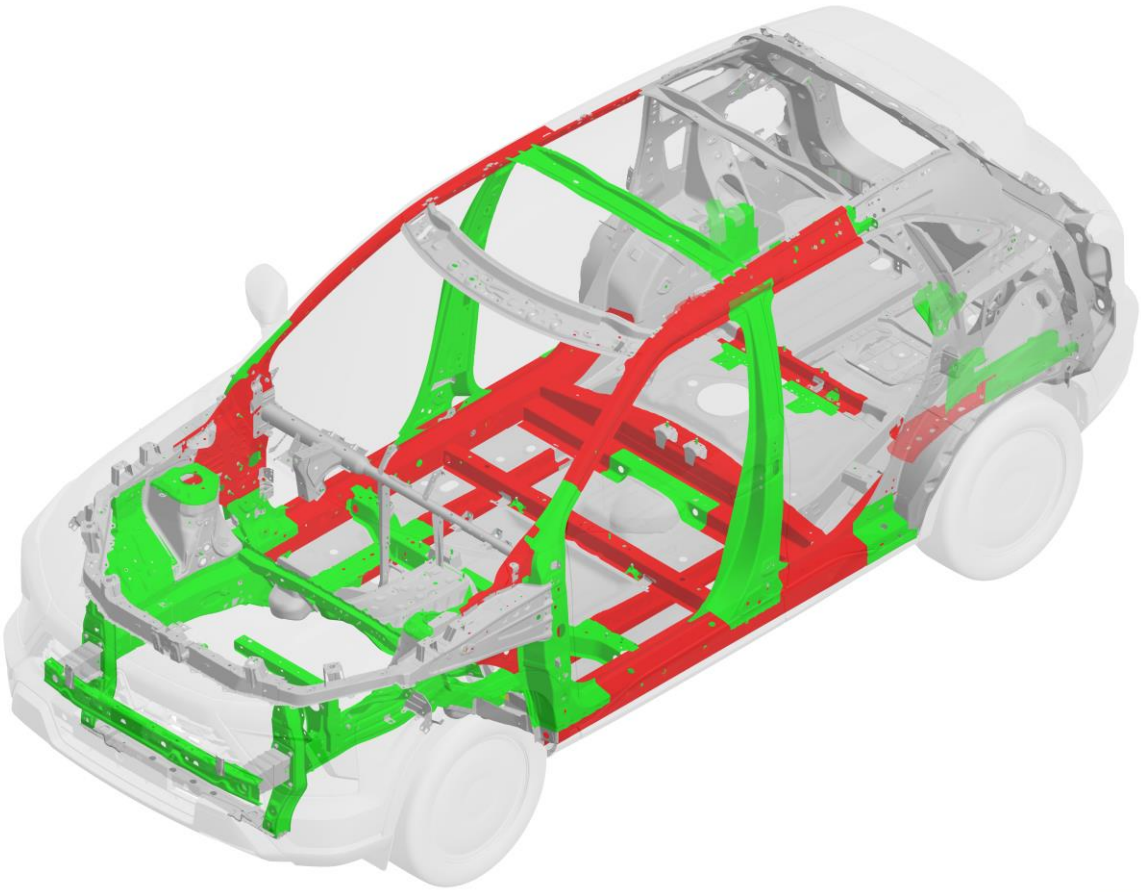

DF5001CMAA

: - 440 MPa	: 590 MPa	: 980 MPa

Vehicle CUT Zones

If you need to cut the vehicle body, cut the vehicle body and perform rescue work.

- Preliminary confirmation

Read this page and refer to "1-2. High voltage wiring cable location" before cutting the vehicle body.

WARNING:

- Use a hydraulic cutter or a suitable tool which does not generate sparks to cut the vehicle body. If you fail to do this, you or the passengers may be seriously injured.
- Never touch any exposed orange-colour high voltage wiring cables (cutoff or break a plastic jacket), or the portions shown in the figure.
- NEVER cut the drive battery.

	Risk of high voltage shock Never cut this area in vicinity of the high voltage components and cables as an electric shock may occur. Risk of air bag deployment Do not cut this area because there is risk that an air bag may be deployed due to a short circuit or an impact caused by the accident. If an air bag has already been deployed, this area can be cut. If at least one minute has elapsed after disconnecting the negative terminal of 12V auxiliary battery or changing the power supply mode of the power switch to OFF, this area can be also cut.
	CUT ZONE

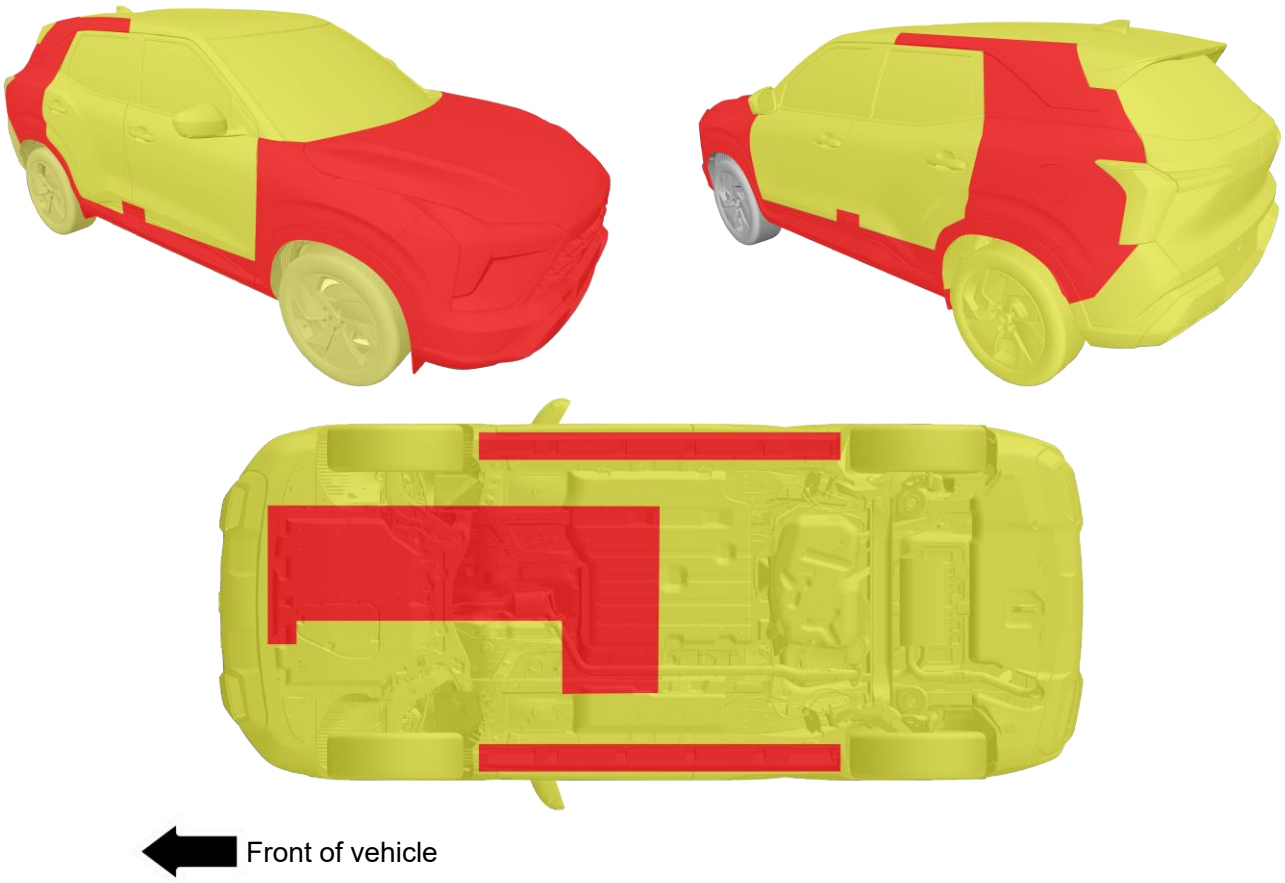

Bottom view

Opening the door with a spreader or cutter

WARNING:

- Use a hydraulic cutter or a suitable tool which does not generate sparks to cut the vehicle body. If you fail to do this, you or the passengers may be seriously injured.
- Never touch any exposed orange-colour high voltage wiring cables. (cutoff or break a plastic jacket)
- NEVER cut the drive battery.

If you cannot open the door from the outside, use a spreader, cutter, etc. to rescue the door if necessary.

1) Insert the tip of the spreader into the door latch and open the spreader to make a gap.
2) If necessary, compress the front fender with a spreader to make a gap in the door hinge part.
3) Insert the cutter into the gap between the door hinges created, to break it hinges and open the door.

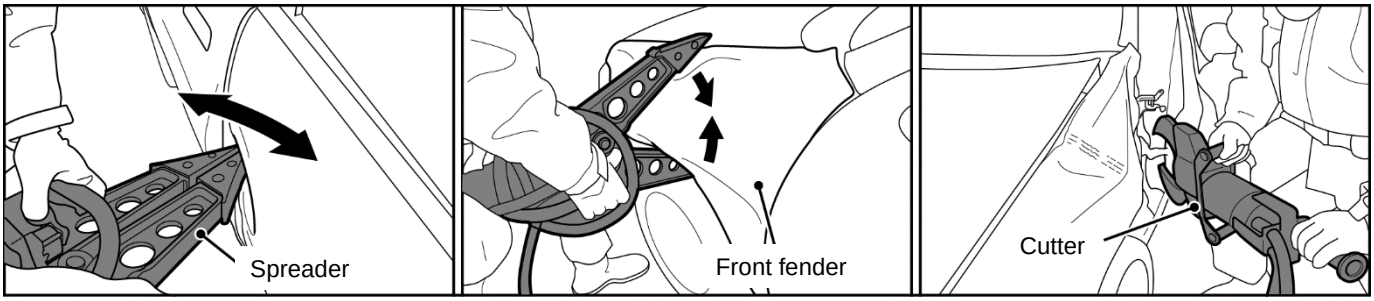

NE0074EJM0

4. Securing space by rams

If the body is crushed and you cannot rescue the occupant, use a rams on the crushed part to push the body wide and secure a space for rescue. If necessary, cut the pillar part and expand it.

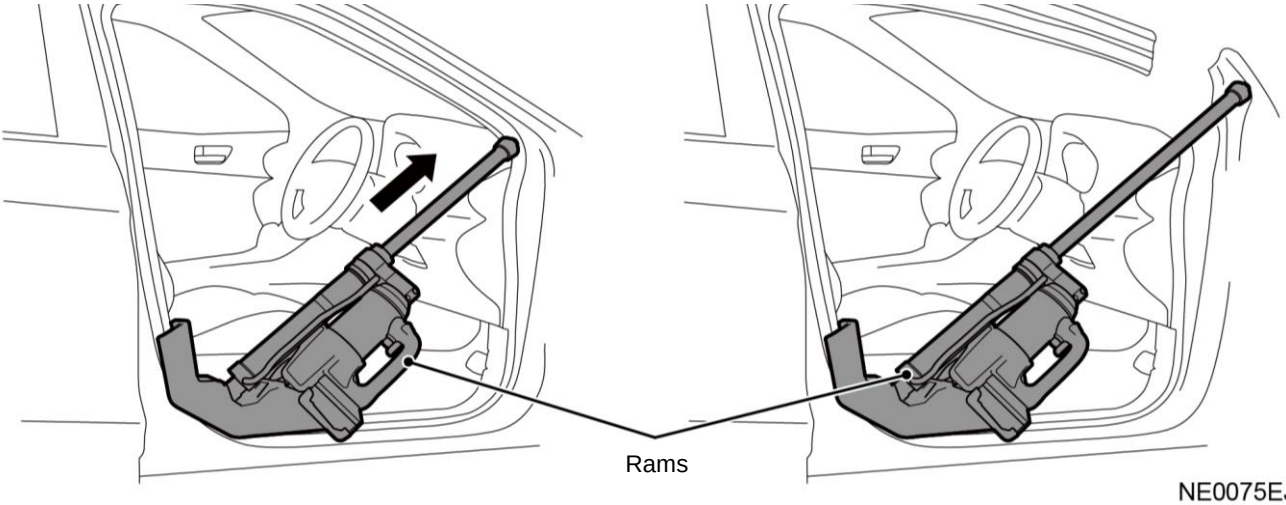

NE0075EJM0

5. Stored energy / liquids / gases / solids

Fluids / gases used in this vehicle

	Capacity & Type	Colour
Fuel tank (Petrol)	42 litres	The colour differs depending on petrol types.
Li-ion drive battery	Nominal voltage：259V Total electric energy: 1.1 kWh	Clear & colourless
12V auxiliary battery	12V – LN1 (45 Ah)	Clear & colourless
Engine oil	4.0 litres	Dark brown
Engine coolant	5.9 litres	Blue-green
Brake fluid	As required	Clear & colourless
Hybrid EV System coolant	2.2 litres	Blue-green
Transaxle fluid	4.87 litres	Amber
Refrigerant (air conditioner)	HFC-134a: 405 – 445 g	Non colour

WARNING:

A flammable “carbonic acid ester solution containing lithium salt” is used as the electrolyte for the drive battery.

*: Refer to “10. Explanation of pictograms used”

About flammable substances

Flammable substances	Flame-retardant substance
･Plastic ･Electrolyte substance ･Oil / Gasoline ･Flammable gas * ･Others	･Carbon fiber ･Refrigerant gas

*: Combustible gas generated when the drive battery is deformed or damaged.

Drive Battery information

Drive battery

- The battery operates the motor and air conditioning. In addition to the drive battery, XFORCE (HEV) has a 12V auxiliary battery which operates lamps, wipers, etc.
- Compact, light-weight lithium-ion battery with high energy density is used for the drive battery.

The risk in normally use

- The Hybrid EV System uses high voltage up to DC 310 V. The system can be hot during and after starting and when the vehicle is turned off. Be careful of both the high voltage and the high temperature. Follow the warning labels that are attached to the vehicle.
- Always assume the high voltage battery and associated components are energized and fully charged.
- Never perform servicing and rescue when READY indicator is illuminating because the high voltage system is operating.

In case of a collision

- If you detect leaking fluids, sparks, smoke, flames, gurgling, popping or hissing noises originating from the high voltage battery component, contact emergency services immediately. This may result in a fire.
- Physical damage to the vehicle or high voltage battery may result in immediate or delayed release of toxic and/or flammable gases and fire.

In case of leaking fluids

- The electrolyte of the drive battery is a colorless, translucent liquid that has a slightly sweet smell and has about the same viscosity as water.
- The electrolyte permeates the electrode bodies and separators inside the battery cells, so even in the event that the drive battery is damaged, a large amount of electrolyte will not flow out of the drive battery.
  If by any chance electrolyte is flowing from the drive battery, move it away from flames immediately as it is flammable. Provide adequate ventilation, put on solvent-resistant protective gear, and wipe up the electrolyte using a rag or shop towel, etc.
- Leaked electrolyte and its vapors may react with water in the air to generate acidic substances that irritate the eyes and skin. If by any chance the electrolyte comes into contact with skin or gets into your eyes, rinse with a large amount of running water and seek treatment from a physician immediately.
- Any fluids other than the drive battery electrolyte are the same as normal automobile fluids used in combustion engine vehicles.
  Handle other fluids in the same ways as those from combustion engine vehicles.

CAUTION:

Dispose of any rags or absorbent mats used when cleaning up electrolyte leaks in accordance with the laws of each country.

6. In case of fire

1. Vehicle fire

In case of vehicle fire, contact the fire department immediately and follow the steps below to start extinguishing the fire.

In the event of a vehicle fire, use a large amount of water or an ABC powder fire extinguisher to extinguish and cool the fire.

WARNING:

Failure to follow these instructions may result in serious injury such as electric shock:

1) The drive battery is designed to prevent a substantial amount of electrolyte from leaking from the drive battery just in case it is broken.
2) The drive battery uses an electrolyte made of flammable "Carbonate ester solution of lithium salts". When reacting with moisture in the air, this electrolyte generates acidic organic vapour which is harmful to human body.
3) Therefore, when handling this, please use appropriate Personal Protective Equipment (PPE) including mask for organic gas, solvent resistance gloves and eye protector and use appropriate caution.

*: Refer to "10. Explanation of pictograms used"

2. Fire-extinguishing

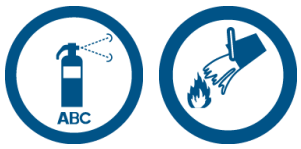

Use ABC powder fire extinguisher or large quantity water to extinguish the fire

*: Refer to "10. Explanation of pictograms used"

WARNING:

- Never use seawater or any water containing salt.
- Please note the following safety distances when extinguishing a fire.
  When extinguishing a fire by spraying with water: Keep a distance of 1 m or more and extinguish the fire.
  When the fire is extinguished when it is fully opened by discharging water (straight): Keep a distance of 5 m or more and extinguish the fire.

1) **By using fire extinguisher**

   Use a fire extinguisher which is suitable for flammable liquid and electrical equipment fires.

2) **By using water**

   Use water not containing salt, such as tap water, well water or pond water.

   DO NOT attempt to extinguish the fire with a small amount of water as it is dangerous.

   Use large quantity of water.

   A large volume of water, such as from a fire hydrant must be used. Unless a large volume of salt-free water is available, keep away from the vehicle fire and wait for fire department to arrive.

CAUTION:

When there is a possibility that the water has gotten inside the drive battery, treat the vehicle as a submerged vehicle. (Refer to "7. In case of submersion")

3) **Disconnection of the high voltage circuit**

WARNING:

After a vehicle fire, electrical hazards may remain potentially. Insulation of high voltage wiring may be damaged or burned out by high temperature, and in such a case, be sure to wear insulating personal protective equipment and approach the vehicle.

Disconnect the high voltage circuit by the following procedures.

1) Change the power supply mode of the power switch to OFF. (Refer to 2-1.)
2) Disconnect the 12V auxiliary battery negative terminal. (Refer to 3-5.)
   NOTE: How to open tailgate (Refer to 3-4.)
3) Disconnect the power unit control fuse. (Refer to 3-6.)
4) Remove the service plug (Refer to 3-7.)

4) **Checking the disconnection status of the high voltage circuit**

WARNING:

Be sure to wear insulating personal protective equipment and check the disconnection status of the high voltage circuit.

Measure the voltage at the high voltage wiring cable connected to the power drive unit by the following procedures.

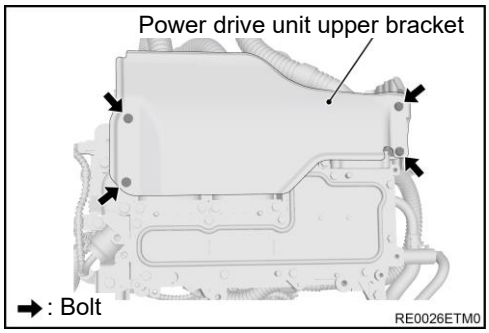

1) Remove the power drive unit upper bracket inside the engine compartment.

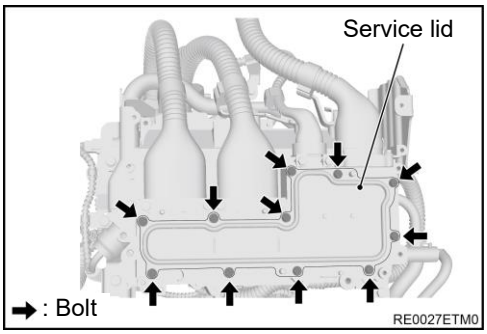

2) Remove the service lid of the power drive unit.

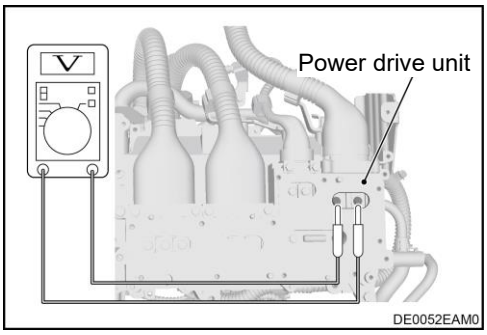

3) Measure the voltage as shown in the figure using a high voltage multimeter.
   Normal voltage: Approximately 0 Volt

If the voltage still exists at the power drive unit, disconnect the high voltage wiring that connects to the power drive unit. Insulates the separated high-voltage wiring terminals to prevent electric shock.

5) **Vehicle procedure after extinguishing a fire**

Be sure to wear insulating protective equipment and dispose of it.

When lifting a vehicle with a crane or lift, lift the vehicle body, not the wheels.

Use an insulating sheet between the crane or lift and the car body to lift it.

When mounting the vehicle on the loading surface of a truck, lay an insulating sheet and place it on the insulating sheet.

When transporting only the drive battery, lay an insulating sheet on the loading surface, place it on the insulating sheet, and cover it with a non-energized cover.

Attach the high voltage identification label to the vehicle.

*: Refer to “10. Explanation of pictograms used”

7. In case of submersion

1. Submerged Vehicle

CAUTION:

If the drive battery and high voltage system are immersed in water, they will be treated as submerged.

If the vehicle is submerged or partially submerged, remove occupants from the vehicle and water.

Then shut down the 12V auxiliary battery and high voltage system.

If the vehicle is submerged, water may enter the drive battery.

If a small amount of water gets into the drive battery, there is a risk of abnormal heating or fire due to an internal short circuit.

WARNING:

- If water enters the driving battery, hydrogen gas may be generated.
- When seawater enters, a large amount of hydrogen gas is generated by rapid electrolysis due to salinity, which may cause a fire.
- After the vehicle is pulled out of the water, open the windows and doors as there may be hydrogen gas in the vehicle.

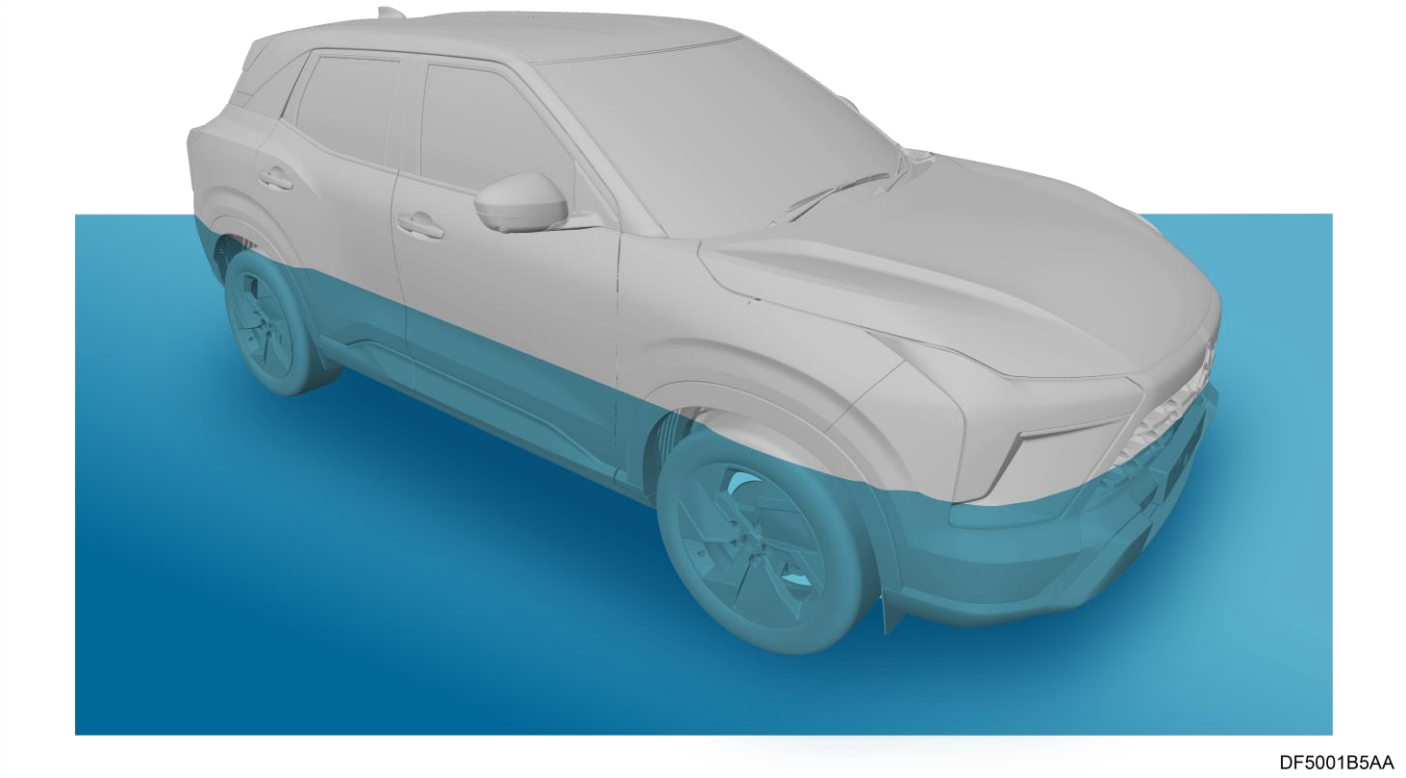

DF5001B5AA

Work procedures

If the vehicle is submerged or partially submerged, take the following work procedures:

1) Rescue the occupants and pull the vehicle out of the water.
2) Inspect the vehicle for damage. In the following cases, wear insulated Personal Protective Equipment (PPE) and carry out the rescue operation while taking care not to touch the drive battery and orange-colour high voltage wiring cables.
   - When the vehicle is severely damaged.
   - When the drive battery is deformed or damaged, and internal parts are exposed.
   - When the damage condition of the drive battery cannot be determined.

CAUTION:

If the drive battery is damaged, consult the nearest Mitsubishi Motors Dealer how to handle the drive battery.

3) Disconnect the high voltage circuit by following the flowchart below. Depending on the vehicle conditions, the high voltage circuit may not be disconnected, so wear insulated Personal Protective Equipment (PPE) and carefully carry out the procedures.

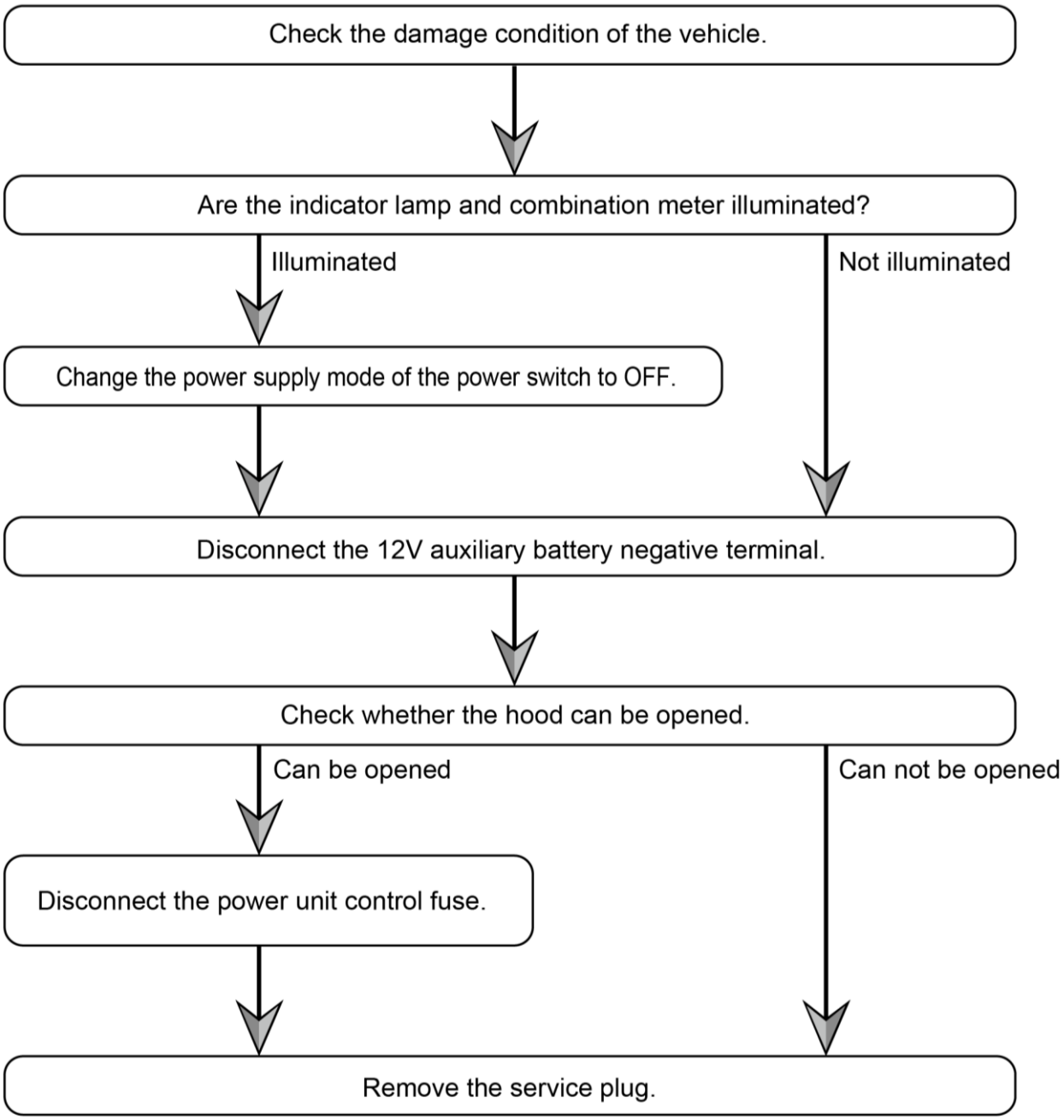

RE0030ETM0

High voltage circuit disconnection procedures

- How to change the power supply mode of the power switch to OFF (Refer to 2-1.)
- How to open the tailgate (Refer to 3-4.)
- How to disconnect the 12V auxiliary battery negative terminal (Refer to 3-5.)
- How to disconnect the power unit control fuse (Refer to 3-6.)
- How to disconnect the service plug (Refer to 3-7.)

4) Perform “Discharge measures for drive battery”. (Refer to 9-3.)

*: Refer to “10. Explanation of pictograms used”

8. Towing / transportation / storage

1. How to Transport

Transport the vehicle on a flatbed truck or tow the vehicle with all wheels off ground

- Vehicle dimensions. (Refer to 1-4.)

WARNING:

- Never tow the vehicle with front wheels and/or rear wheels on the ground. This may cause damage to the electric motors and transaxle.
- When the high voltage leakage is concerned, load the vehicle so that only the tyres are in contact with the loading surface. If the metal part of the vehicle, such as body panel, is in contact with the loading surface due to the condition of the vehicle, insert an insulating sheet between the vehicle and loading surface.

CAUTION:

If the 12V auxiliary battery charging level is too low or the 12V auxiliary battery negative terminal is disconnected, you cannot move the selector position from the P position.

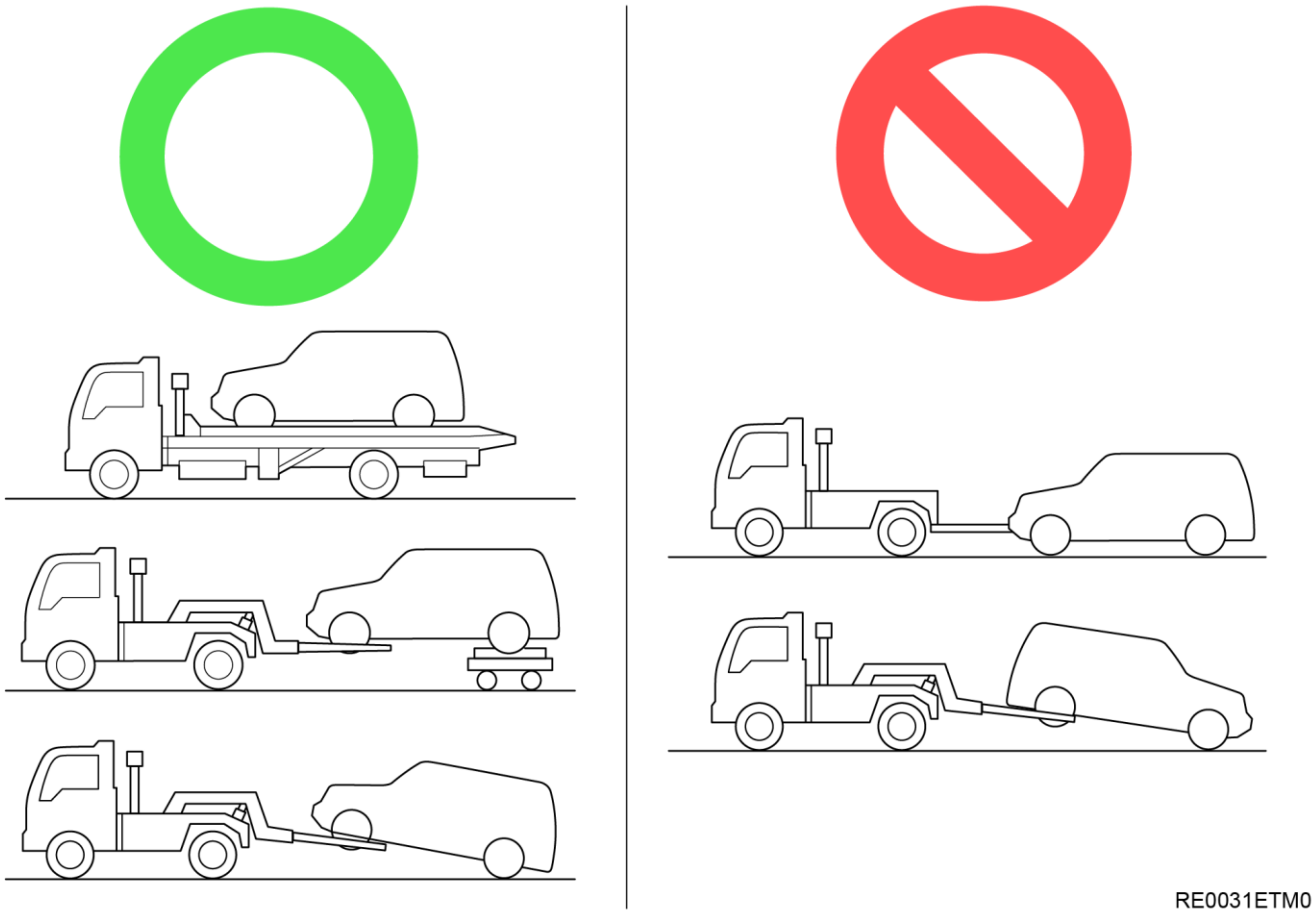

- The figure shows examples only.
- When loading the vehicle on the truck, handle carefully to prevent further damage.

2. How to Tow (only in emergency)

1) Cover your fine-tipped tool with a cloth, insert it into the groove of the front bumper cover, and remove the cover.
2) Attach the tow hook using a hard metal rod or the like.
3) Hook a towrope to the tow hook of the vehicle body.
4) Start the Hybrid EV System.
   If the Hybrid EV System cannot be started, put the operation mode of the power switch in “ON”.
5) Move the select position in “N” (Neutral) position.
6) Press down the electric parking brake switch while depressing the brake pedal.
   The indicator in the combination meter will turn off.

NOTE:

When you can not release the electric parking brake by operating the switch due to malfunction of the vehicle, release the electric parking brake manually. (Refer to 8-3.)

7) Turn on the hazard warning lamps if required by law. (Follow the local driving laws and regulations.)
8) During towing, make sure that close contact is maintained between the drivers of both vehicles, and that the vehicles travel at low speed.

WARNING:

If the vehicle is towed with the operation mode of the power switch in “ON” without starting the Hybrid EV System, the 12V auxiliary battery may be fully discharged during towing. In this case, the brake performance becomes very poor and the steering wheel becomes very heavy.

CAUTION:

・For vehicle equipped with the Adaptive Cruise Control system (ACC) and Forward Collision Mitigation system (FCM), stop these systems to prevent an unexpected accident or unexpected operation during towing.
(Refer to “
To turn off FCM”) (Refer to “To turn off ACC”)

・When the vehicle is to be towed by another vehicle with all the wheels on the ground, make sure that the towing speed and distance given below are never exceeded, avoiding damage to the transaxle.

・Towing speed: 40 km/h **・Towing distance: 40 km**

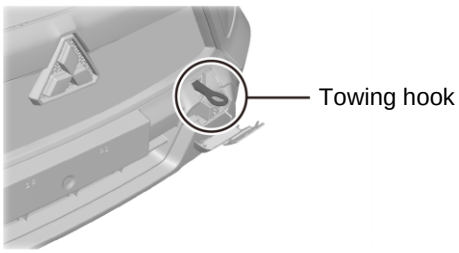

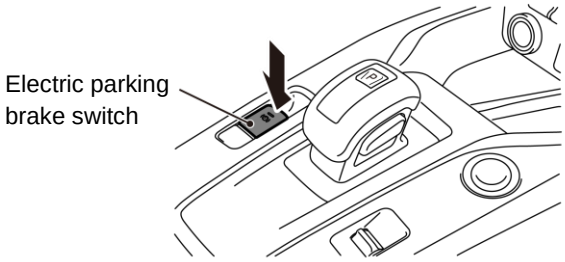

DF5001EWAA

NOTE:

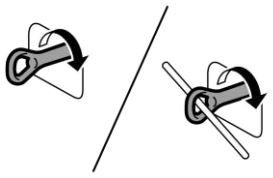

DF5001EXAA

- Cover the end of a suitable tool with cloth and use it to remove the hook cover from the bumper. Securely install the recovery hook as illustrated.
- The hook is stored in the right side of the luggage area.

To turn off FCM

Select “Settings” - “Driver Assistance” - “FCM” in the multi-information screen (when the operation mode of the power switch is ON) to turn off FCM system. “FCM system OFF warning lamp” will illuminate.

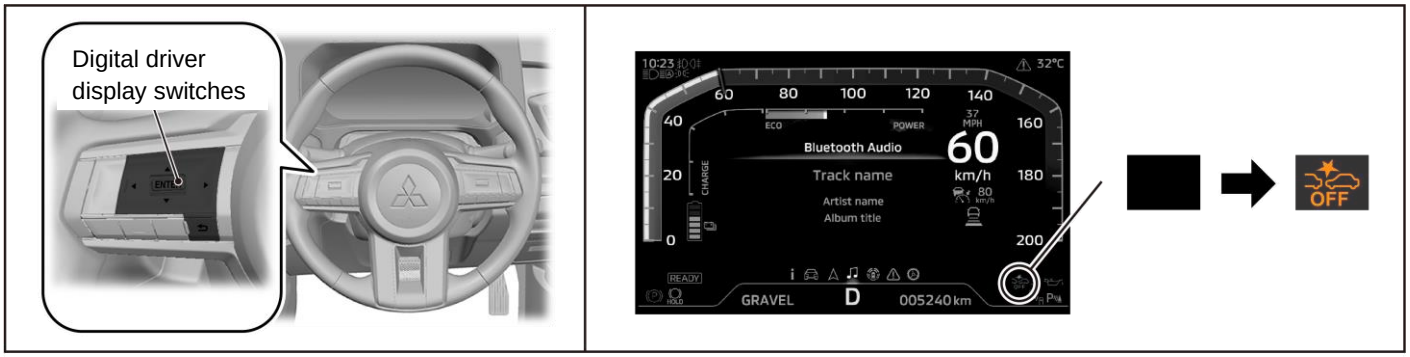

DF5001GPAA

To turn off ACC

Press the “ACC ON/OFF switch” when ACC is in the ‘ON state’ to turn off ACC.

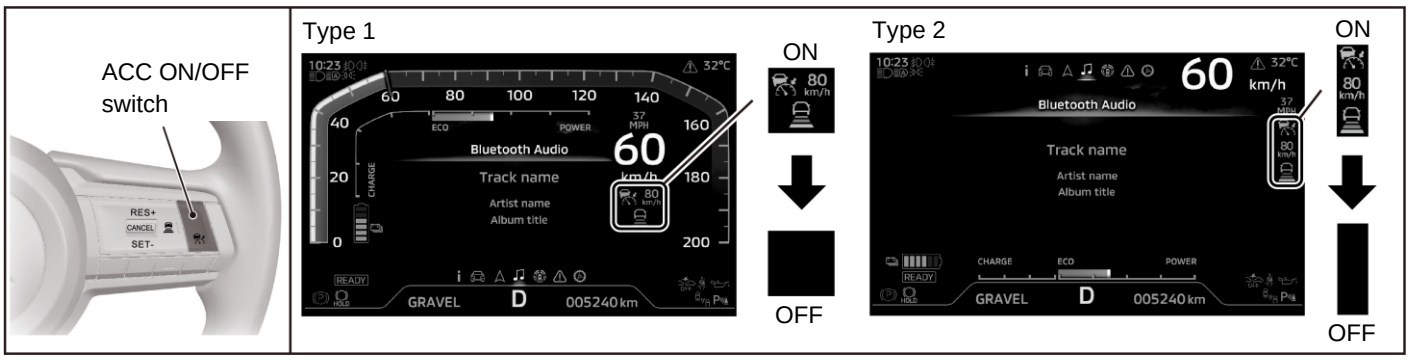

DF5001GQAA

3. How to release the electric parking brake manually

WARNING:

Releasing the electric parking brake manually should only be done in an emergency.

1) With the vehicle parked, push the electric parking switch, then chock the wheels.

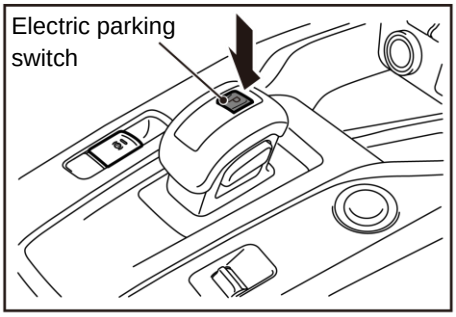

DF5001EYAA

2) Disconnect the 12V auxiliary battery negative terminal. (Refer to 3-5.)

CAUTION:

- If signs of dirt or water are found around the connector, clean it thoroughly.
- Ensure that no foreign materials intrude into the connector.

3) Disconnect the wiring harness connector from the electric parking actuator.

4) Remove the two bolts to remove the electric parking actuator from the rear brake caliper assembly.

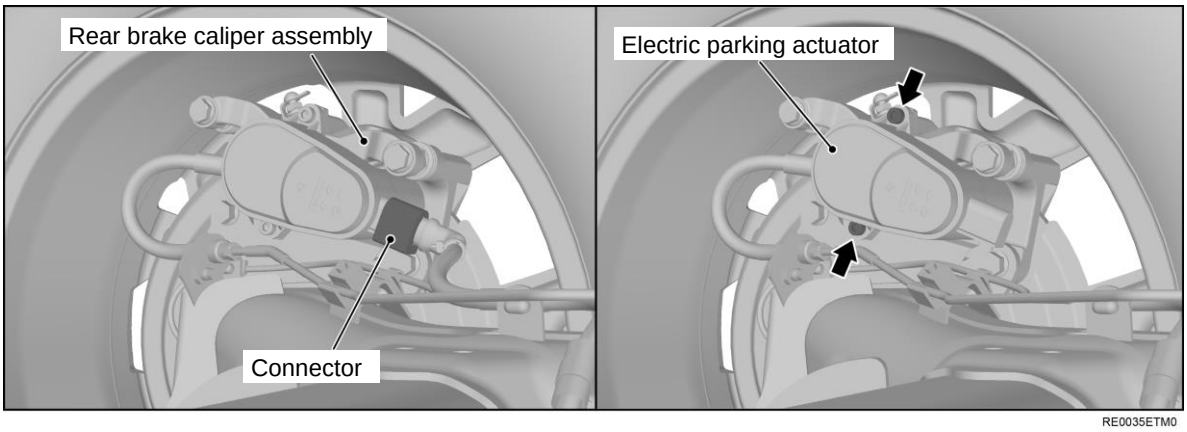

5) Insert a hexagonal wrench (6 mm) to the rear brake caliper assembly, and then turn the wrench clockwise 2 turns.

WARNING:
Depress the brake pedal before releasing the parking brake. If not, the vehicle will start to move as soon as you release the parking brake.

CAUTION:
The brake fluid may overflow.

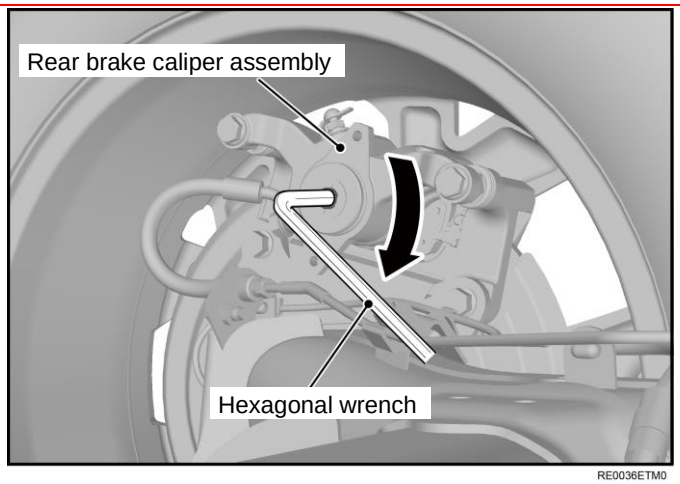

9.Important additional information

1. Supplemental Restraint System (SRS)

Supplemental Restraint System (SRS) air bag component location (Refer to 1-3.)

Caution Labels

The labels indicating the precautions for handling and maintenance of SRS air bags and seat belt with pre-tensioner are attached to the locations shown in the figure. If the label is damaged or is dirty, replace with the new label.

Driver's air bag module

SRS-ECU

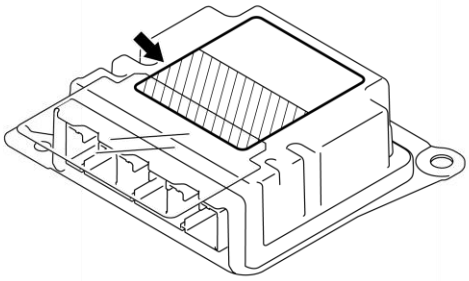

Passenger's (front) air bag module

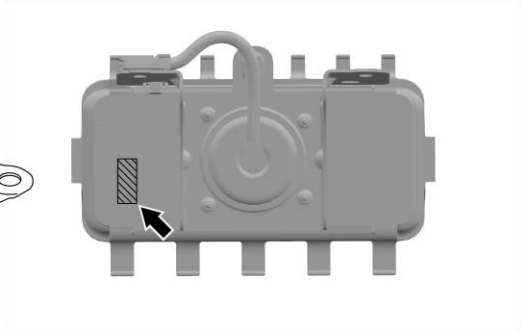

Side-airbag module

Seat belt with pre-tensioner

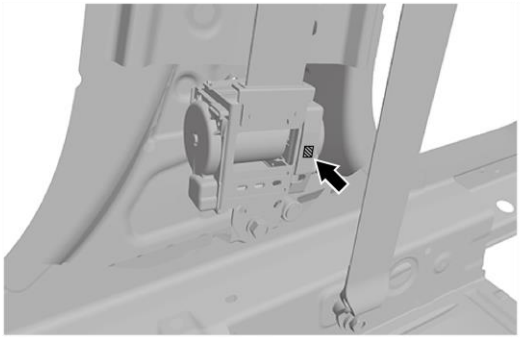

Sunvisor

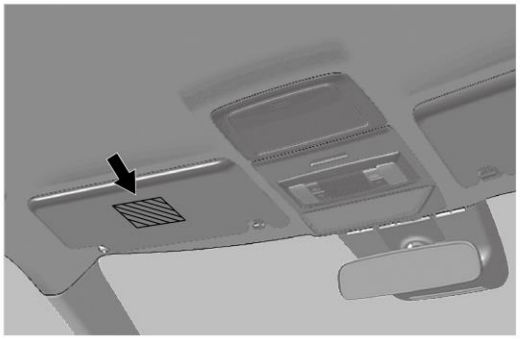

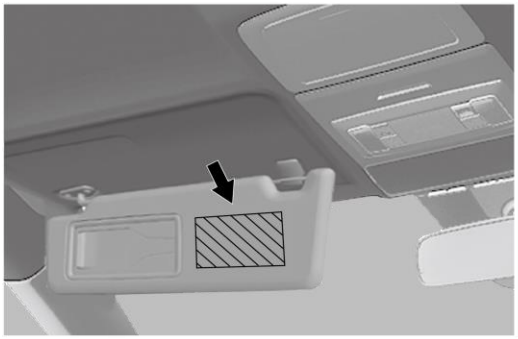

DF5001DZAA

Curtain air bag module

RH

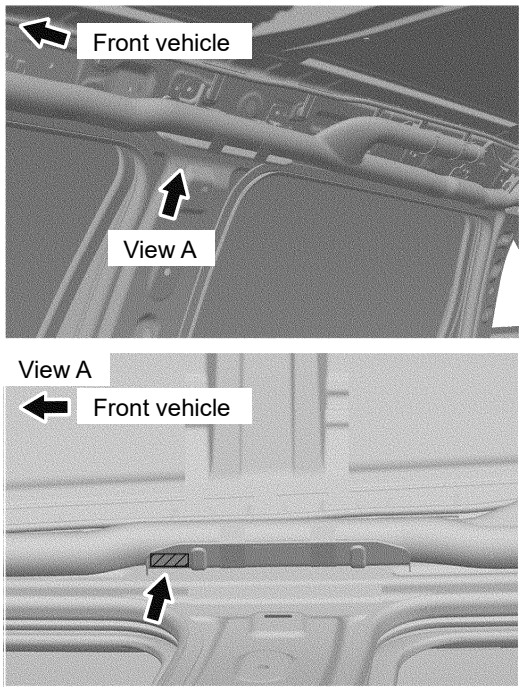

LH

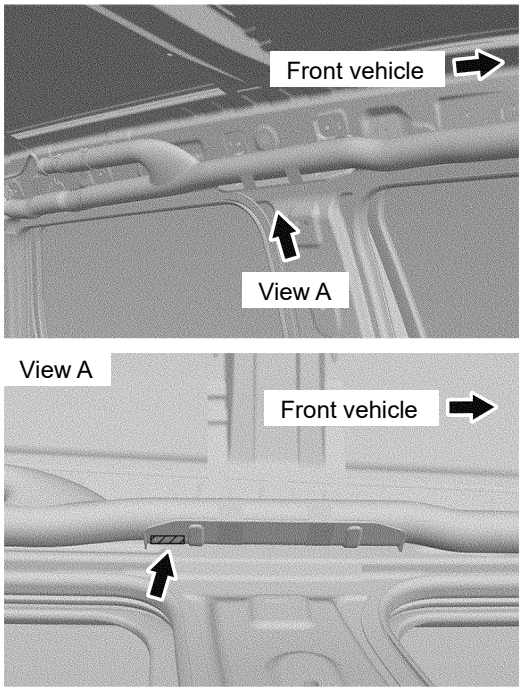

DF5001E0AA

System Operation

FRONT AIR BAGS AND SEAT BELT WITH PRE-TENSIONERS

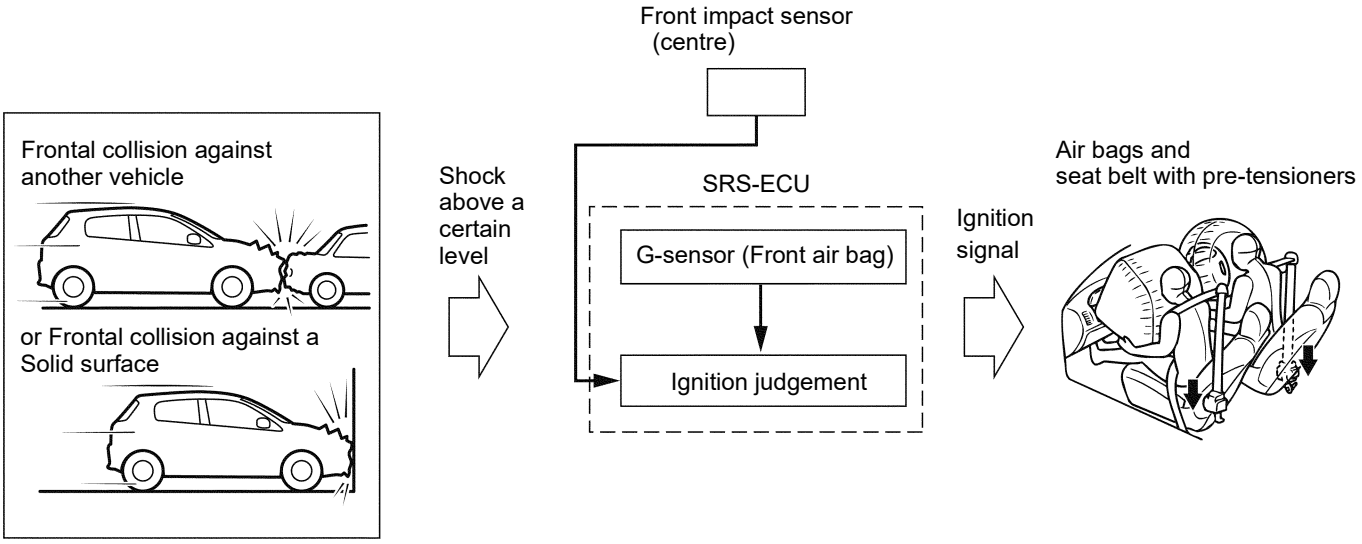

DF5001E1AA

SRS-ECU uses data of the front impact sensor (centre) inside the engine compartment and the G sensor inside SRS-ECU to calculate collision severity during frontal collision. SRS-ECU judges necessity of air bag based on the calculated collision severity. In addition, the SRS-ECU also judges the operation of seat belt pre-tensioners after calculating collision severity.

SIDE AND CURTAIN AIR BAGS

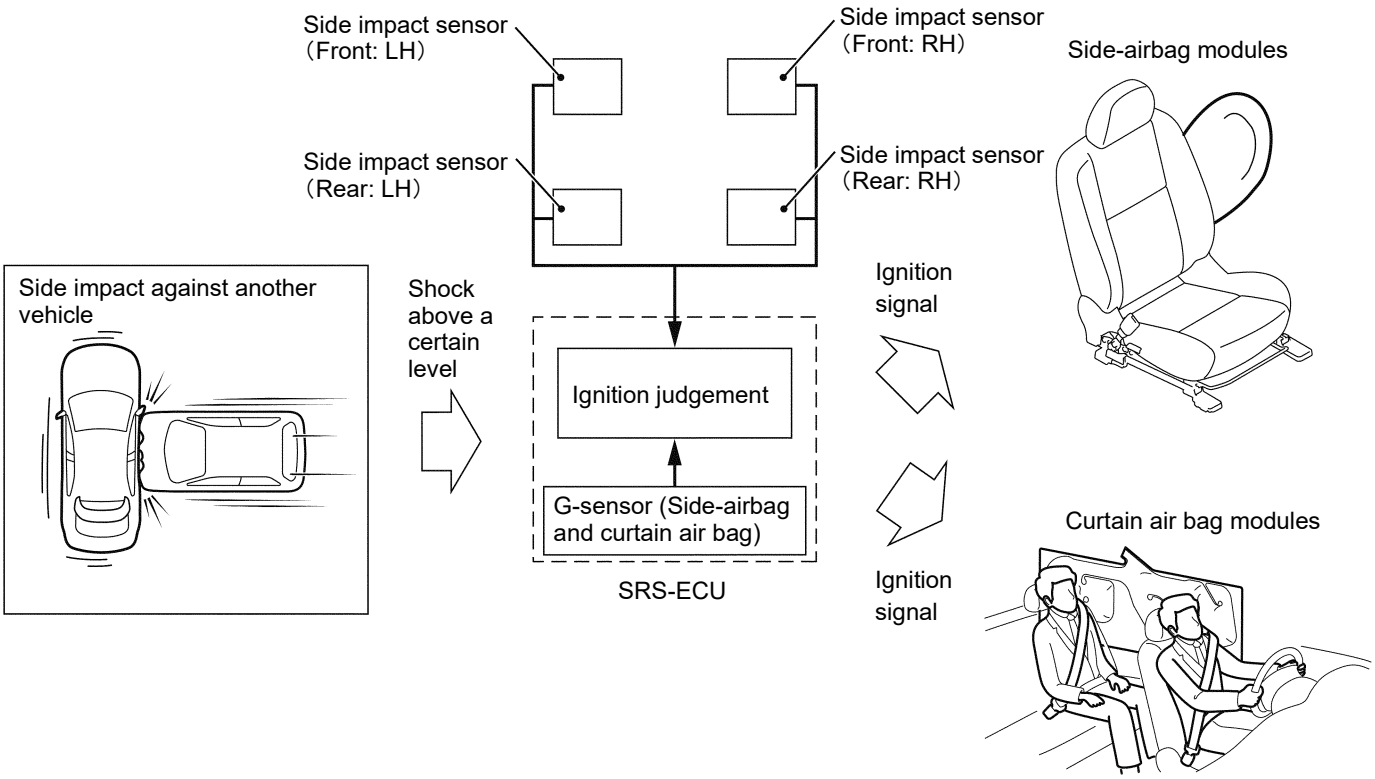

DF5001E2AA

SRS-ECU uses data of the side impact sensor and G sensor inside SRS-ECU to calculate collision severity, during side collision. SRS-ECU judges necessity of side-airbag and curtain air bag based on the calculated collision severity.

System Construction

DRIVER'S AIR BAG MODULE	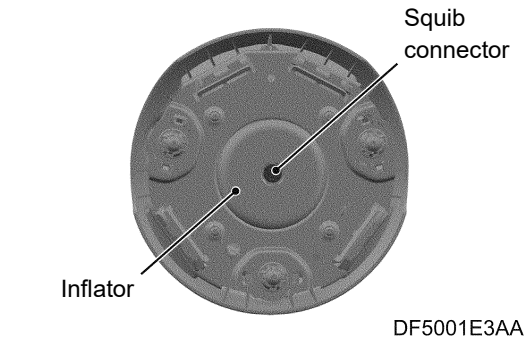	The air bag module is equipped with an inflator that does not contain sodium azide. The air bag is made of nylon and is inflated by the gas from the inflator. Then, as the air bag contacts the passenger, the gas is discharged through two openings of backside of air bag, thus deflating the air bag to reduce the impact on the passenger.
PASSENGER'S (FRONT) AIR BAG MODULE	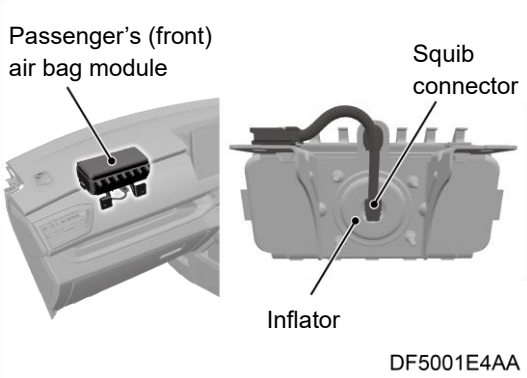	The passenger's (front) air bag module consists of an air bag, and their fasteners. The air bag is made from nylon and inflates by the gas from the inflator. As a passenger is being pressed to the air bag, it deflates, discharging gas from two vents at the side of the air bag to reduce the shock from the impact. For the inflator, the gas which is harmless to the human body has been used.
SIDE-AIRBAG MODULE	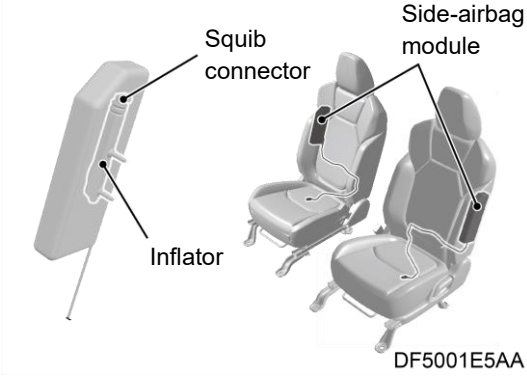	The side-airbag module consists of an air bag, inflator and their fasteners. The modules are installed in the outer side supports of the driver's and front passenger's seatbacks. The side-airbags help protect the occupants regardless of the seat position and seatback angle. The air bags are compactly folded and stored. On the side of the air bag, there are holes through which gas is partially released to alleviate shock to the occupant when the air bag is deployed. For the inflator, the gas which is harmless to the human body has been used.
CURTAIN AIR BAG MODULE	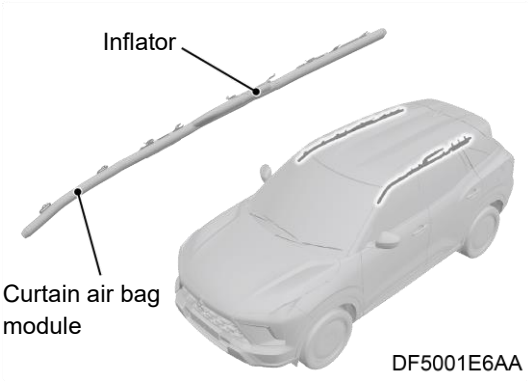	The curtain air bag module consists of an air bag, an inflator, and the fixing gear relating to those parts, and is installed in the roof side sections (from the driver's and the passenger's front pillars to the quarter trim uppers). An inflator that does not contain sodium azide is used.

SEAT BELT WITH PRE-TENSIONER	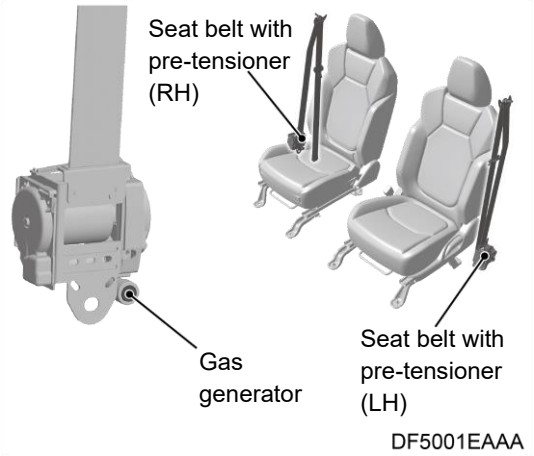	The seat belt with pre-tensioner is installed to the centre pillar part. The seat belt with pre-tensioner consists of seat belt, gas generator, etc. and automatically winds the seat belt at the time of a frontal collision to reduce the forward movement of the passenger.
FRONT IMPACT SENSOR	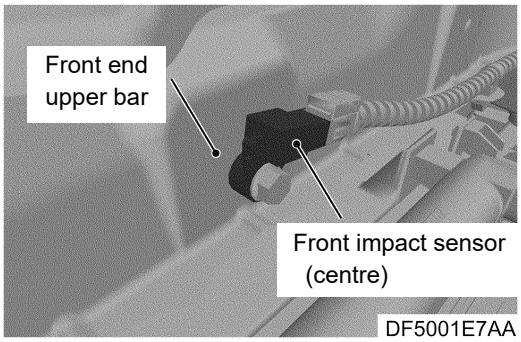	The front impact sensor (centre) is installed on the front end upper bar in the engine room, and the analogue G-sensor is housed in the front impact sensor (centre) . The front impact sensor (centre) transmits the coded acceleration data to SRS-ECU. Based on the data, SRS-ECU determines the deployment stage of the front air bag, then energises appropriate squib. SRS-ECU performs the diagnosis of the front impact sensor (centre) internal components. If a malfunction occurs, it sets the diagnosis code. The front impact sensor (centre) transmits the coded acceleration data to SRS-ECU. Based on the data, SRS-ECU determines the deployment of the driver's air bag, passenger's（front）air bag and seat belt with pre-tensioner, then energises appropriate squib (s).

SIDE IMPACT SENSOR	<Front> 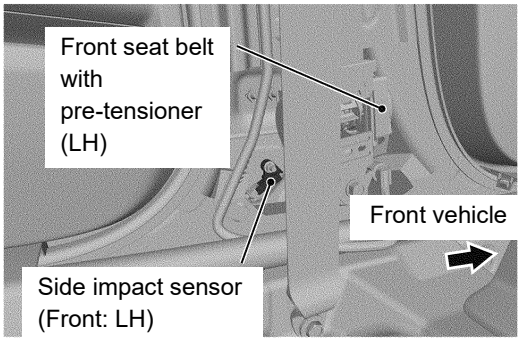 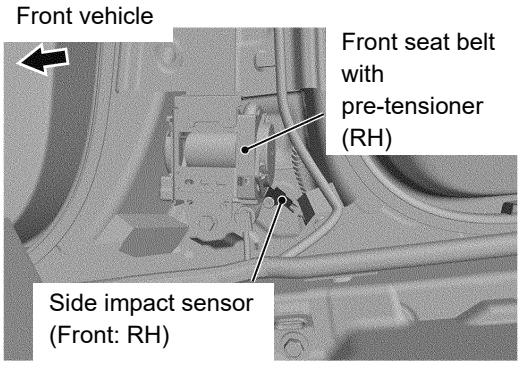 DF5001E8AA <Rear> 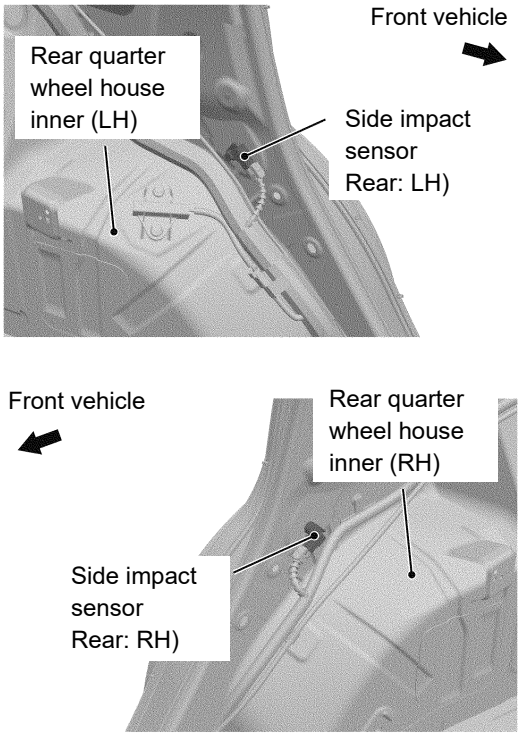 DF5001E9AA	The side impact sensors are installed to the lower part of the centre pillars on both sides and to the quarter panel on both sides, and the analogue G-sensor is housed in the side impact sensor. The side impact sensor transmits the coded acceleration data to SRS-ECU. Based on the data, SRS-ECU determines the deployment of the side-air bags and curtain air bags, then energises appropriate squib (s). SRS-ECU performs the diagnostics of the side impact sensor internal components. If a malfunction occurs, it sets the diagnosis code.

SRS-ECU	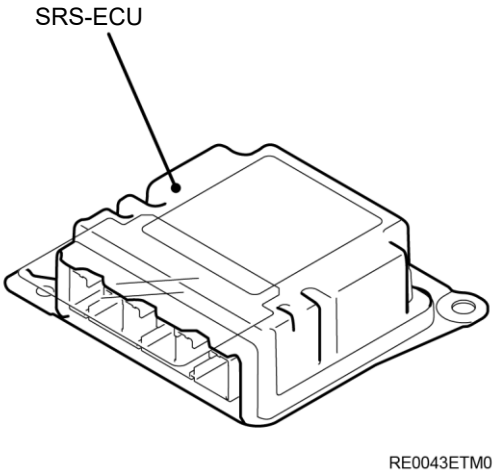	In addition to the analogue G-sensor and safing G-sensor for the frontal collision, the SRS-ECU incorporates the analogue G-sensor and safing G-sensor for the side collision. In the event of a frontal collision, when the front impact sensor in the engine room and the analogue G sensor for the frontal collision in the SRS-ECU detect the collision G at the same time, the SRS-ECU applies electrical current to the driver's seat/front passenger's seat air bag module, and the front seat belt pre-tensioner（squib）. At the same time, the SRS-ECU performs the high voltage shutdown judgement and sends the high voltage shutdown signal to the HEV-ECU. Upon a side collision, when the lateral impact G is simultaneously detected by the analogue G-sensor of side impact sensor and the safing G-sensor for side collision in SRS-ECU, the SRS-ECU outputs the ignition signal to the side-airbag module（squib）and the curtain air bag module（squib）of the relevant side that is subjected to the impact.

2. High voltage component location

Construction diagram

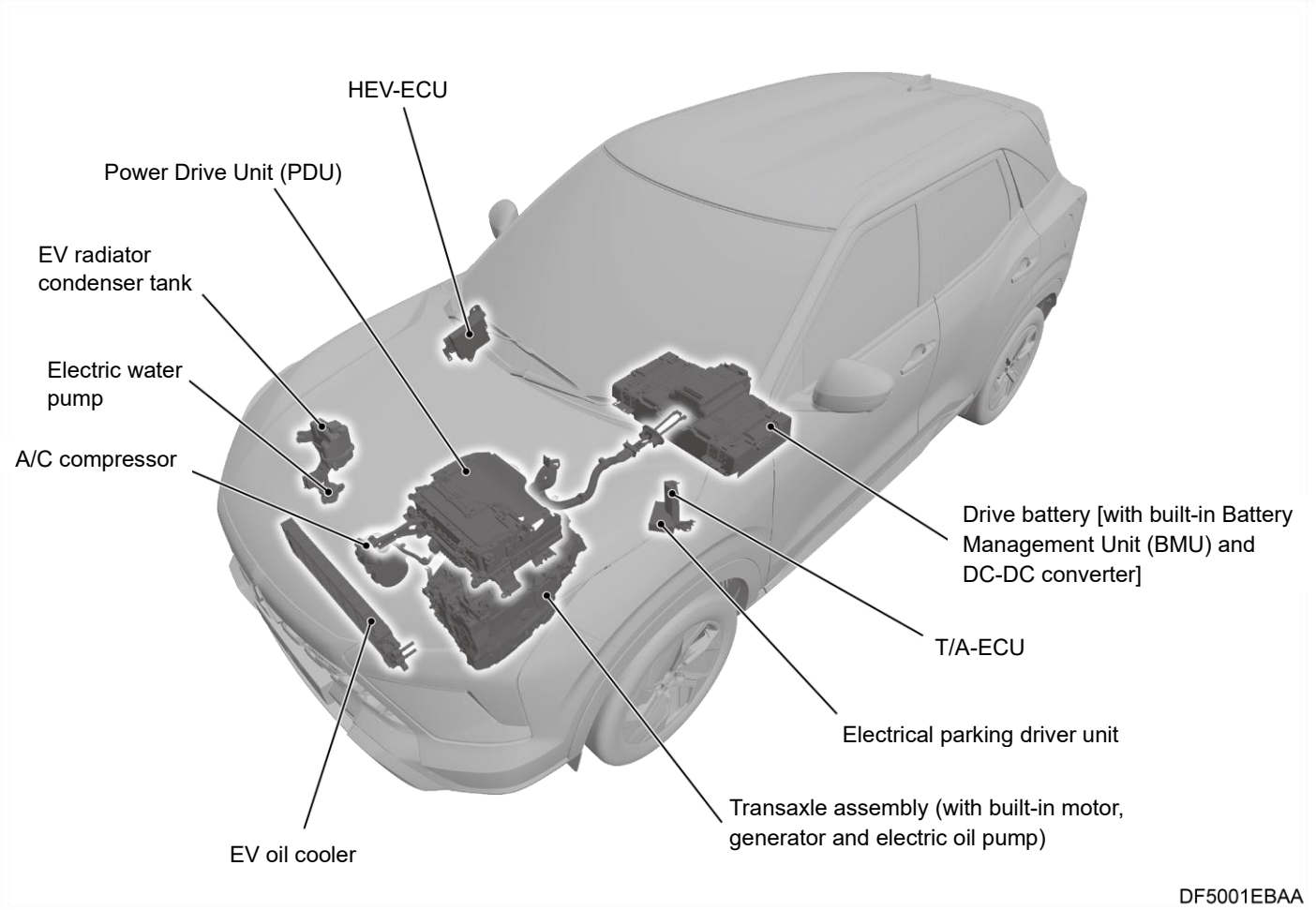

System Operation

DRIVE BATTERY	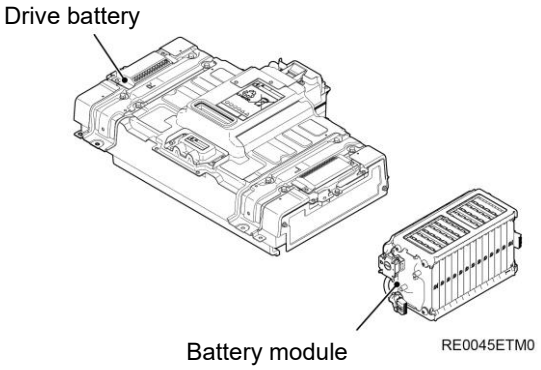	The drive battery consists of lithium-ion battery that is small and lightweight and also has a high energy density. The motor (electric motor unit) and the air conditioner system are powered by the drive battery. The drive battery is housed in the plastic case that has vibration-resistant properties. The case is placed under the centre console in the vehicle. The battery generates a high voltage of 259 V (nominal value). The maximum operating voltage 310 V may be generated depending on the remaining capacity of the battery.
SERVICE PLUG	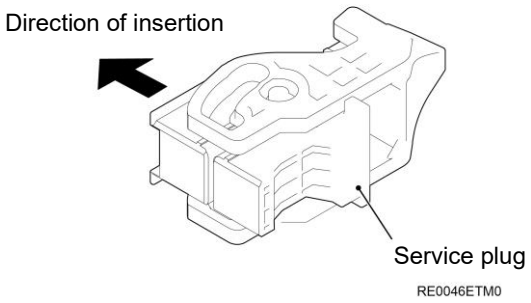	The service plug is installed inside the rear of the floor console in the vehicle. Remove the service plug before performing the check and the maintenance work on the high voltage components to ensure the job safety, shutting off the high voltage circuit.

<Characteristics>

- The drive battery performance gradually decreases due to the duration of use or due to the use conditions.
- The drive battery performance may vary with ambient temperature. Especially in the lower temperature, the cruising range may become shorter.
- When the vehicle is stored at the extremely high temperature or extremely low temperature, the battery performance can decrease.
- Even if the vehicle is not in use, the drive battery may be gradually discharged and the energy stored in the drive battery will be reduced.

<Precautions in use>

- If the vehicle is not used for a long time, check the drive battery meter reading every three months. If the reading is zero, put the power switch in the READY to automatically start the engine. Wait until the engine stops, then turn off the power switch.
- The drive battery is retrieved. When the vehicle is discarded, always contact Mitsubishi Motors Dealer.

3. Discharge measures for drive battery

If the drive battery is damaged or the vehicle is submerged, perform discharge measures as follows.

WARNING:

- When servicing the high voltage components, be sure to wear an insulating protective equipment and remove the service plug in order to shut off the high voltage.
- Fresh water should be poured into the drive battery as soon as possible for the following reasons.
  - Prevention of the generation of large amount of flammable hydrogen gas due to excessive electrolysis
    If salty water enters the inside of the drive battery due to the vehicle being submerged, a large amount of flammable hydrogen gas may be generated due to excessive electrolysis. Therefore, prevent the excessive electrolysis by pouring fresh water inside the drive battery.
  - Prevention of overheating and ignition due to short circuits inside the drive battery
    If a small amount of water enters the drive battery, there is a possibility of abnormal heating or ignition due to an internal short circuit. Pouring fresh water into the drive battery prevents these troubles by discharging the high-voltage electricity and cooling the inside of the drive battery.

How to discharge measures by water injection

1) Turn off the power supply mode of the power switch. (Refer to 2-1.)
2) Move the vehicle to a level, well-ventilated outdoor place.
3) Open all doors and tailgate to prevent fires caused by flammable hydrogen gas.
4) Disconnect the 12V auxiliary battery negative terminal. (Refer to 3-5.)
   NOTE: How to open tailgate (Refer to 3-4.)
5) Disconnect the power unit control fuse. (Refer to 3-6.)
6) Remove the service plug. (Refer to 3-7.)
7) To disconnect the drive battery cable (P, N line) connections, perform the following procedures. For the work procedures, refer to the workshop manual.
   a) Remove the front seat anchor side shield cover rear and harness connection, then remove front seat assembly (LH/RH).
   b) Remove the rear seat cushion assembly.
   c) Remove the front scuff plate (LH/RH).
   d) Remove the cowl side trim (LH/RH).
   e) Remove the rear scuff plate (LH/RH).
   f) Remove the centre pillar lower garnish (LH/RH).
   g) Remove the instrument panel under cover (driver's side).
   h) Remove the instrument panel side cover (driver's side).
   i) Remove the instrument lower panel assembly (driver's side).
   j) Remove the instrument panel centre lower garnish (driver's side).
   k) Remove the instrument panel under cover (passenger's side).
   l) Remove the instrument panel side cover (passenger's side).
   m) Remove the glove box and glove box case assembly.
   n) Remove the instrument panel centre lower garnish (passenger's side).
   o) Remove the gearshift lever panel.
   p) Remove the front floor console panel assembly.
   q) Remove the selector lever.
   r) Remove the floor console box cup holder.
   s) Remove the floor console side cover (LH/RH).
   t) Remove the floor console side cover front.

u) Remove the floor console rear panel assembly.

v) Remove the rear floor console assembly.

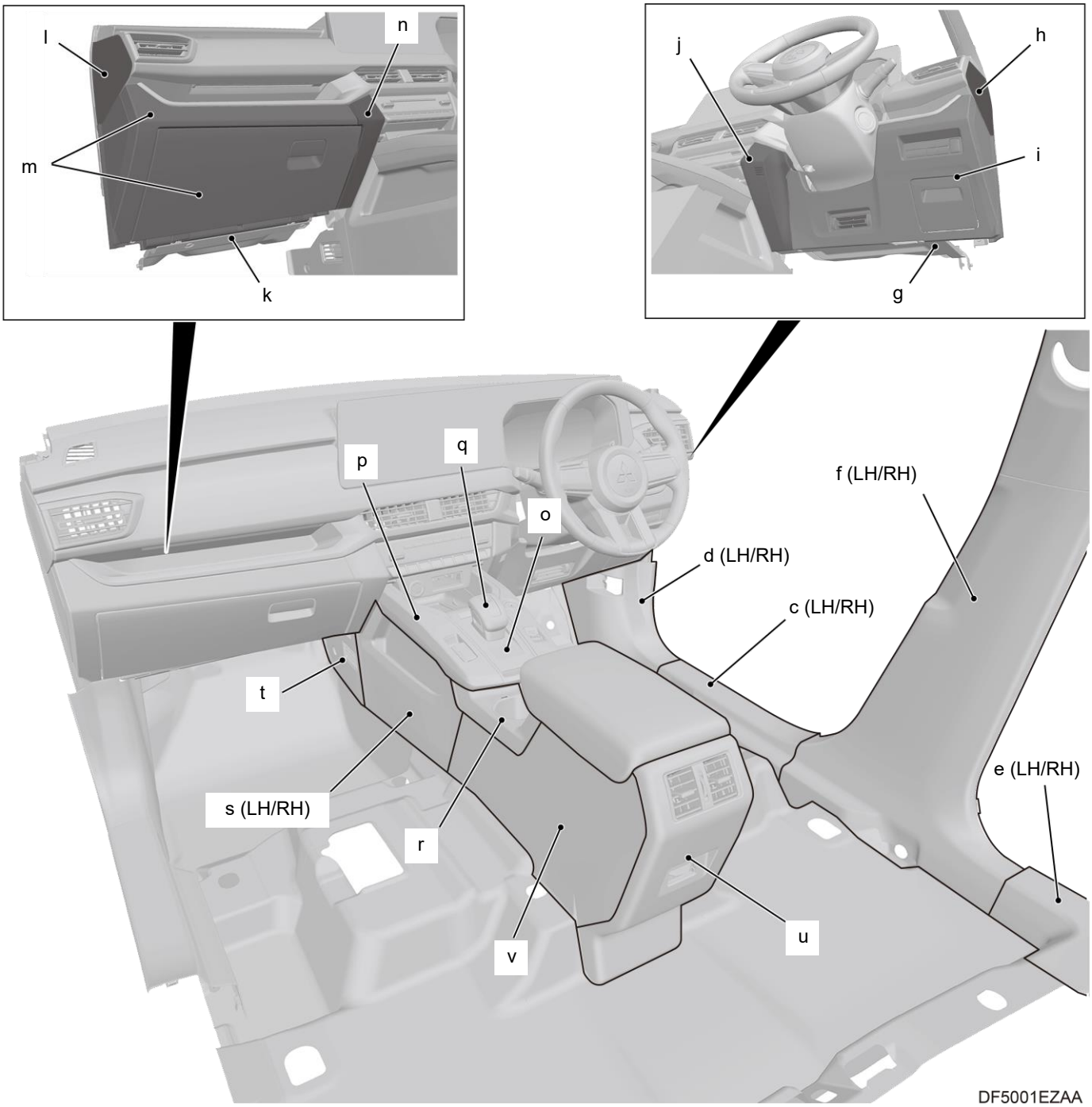

w) Remove the front console pocket (LH/RH).

x) Disconnect the harness connections and remove the floor console base.

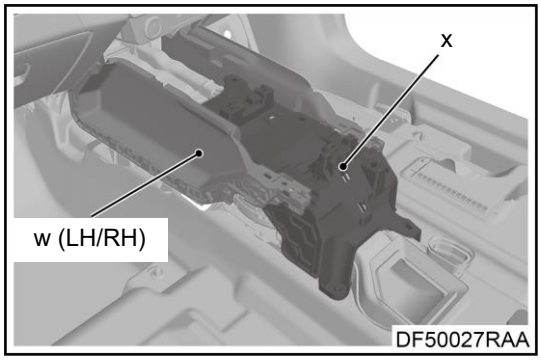

y) Remove the battery fan exhaust duct and drive battery fan.

z) Turn the floor carpet.

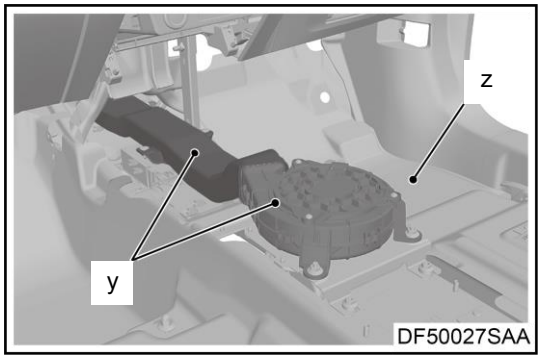

aa) Remove the front seat reg assembly (LH/RH).

bb) Remove the floor console bracket.

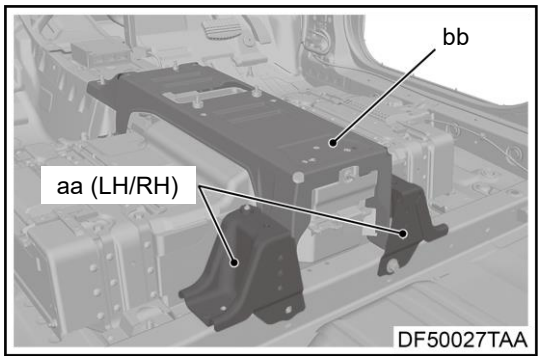

cc) Remove the drive battery terminal cover (front).

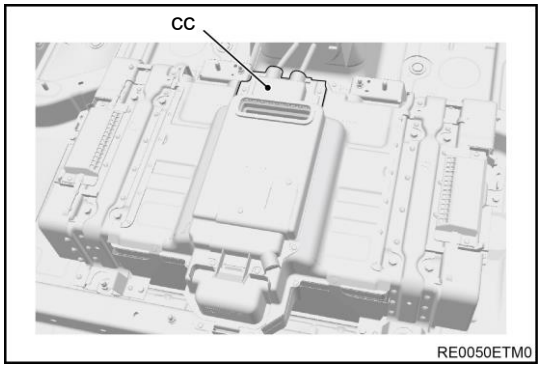

8) Disconnect the drive battery cable terminals (P, N) from the drive battery side.

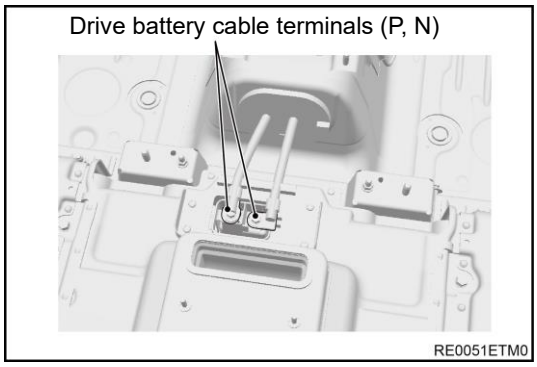

9) Prepare a container for collecting drained water.

CAUTION:

- Care should be taken to ensure that the depth of the hole does not exceed 10 mm so that it does not penetrate the drive battery tray cover.
- Waste water from the drive battery should be disposed properly as industrial waste in accordance with local regulations. As the waste water is an aqueous solution containing a tiny amount (1 to several ppm) of metals such as P, Li, etc., inform an industrial waste disposal contractor and request reliable treatment.

10) Drill two holes about 10 mm depth with a drill of 10 mm diameter or less at the following location to drain water that has accumulated in the drive battery tray section of the front floor.

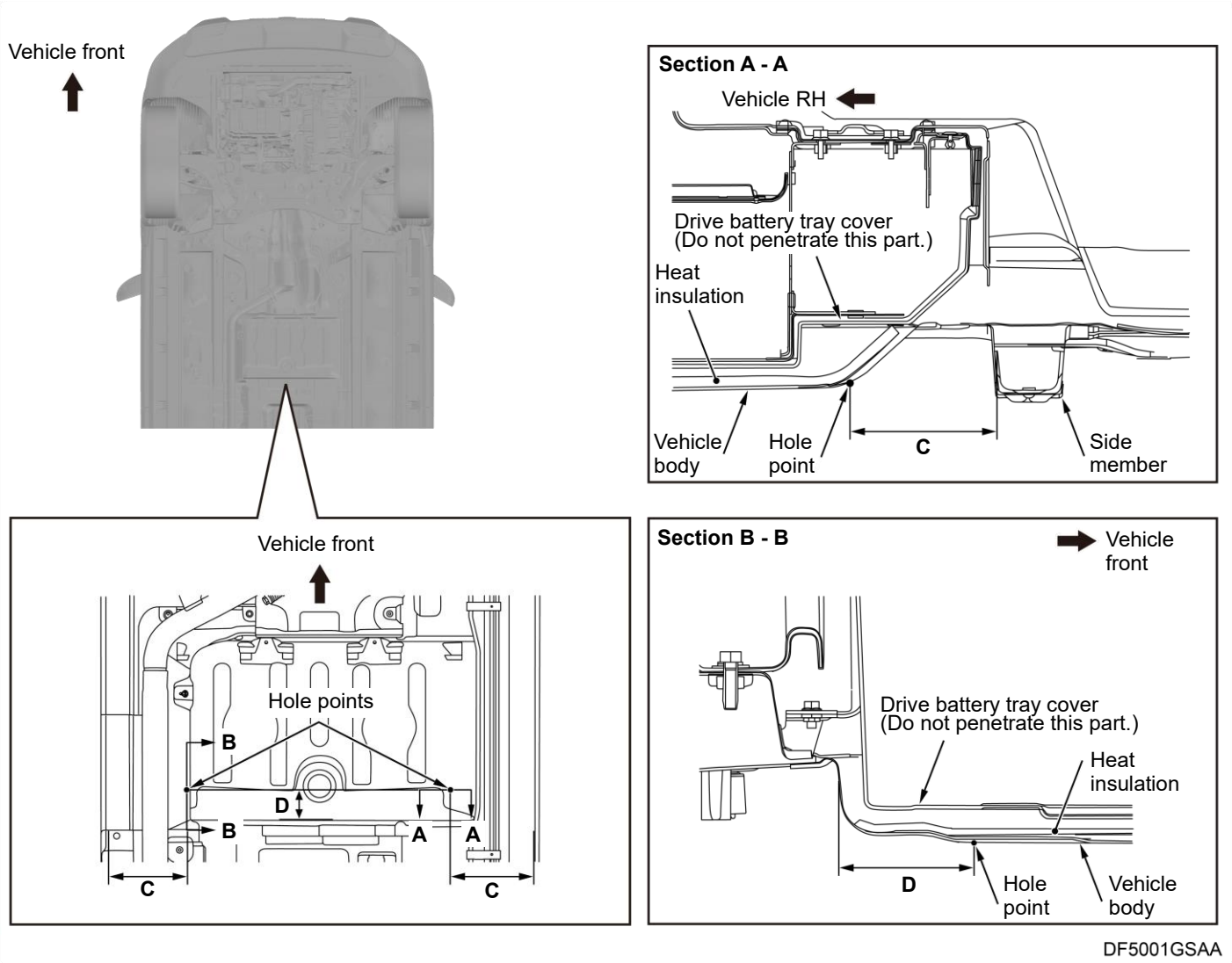

- Dimension C (from the inside of the side member to the vehicle centre direction): 120 mm
- Dimension D (from the vertical surface of the drive battery rear side to the vehicle front direction): 75 mm

11) Fill the drive battery tray cover to full capacity with water (such as tap water, well water, and pond water containing no salt) through the hole to where the service plug lid was installed.

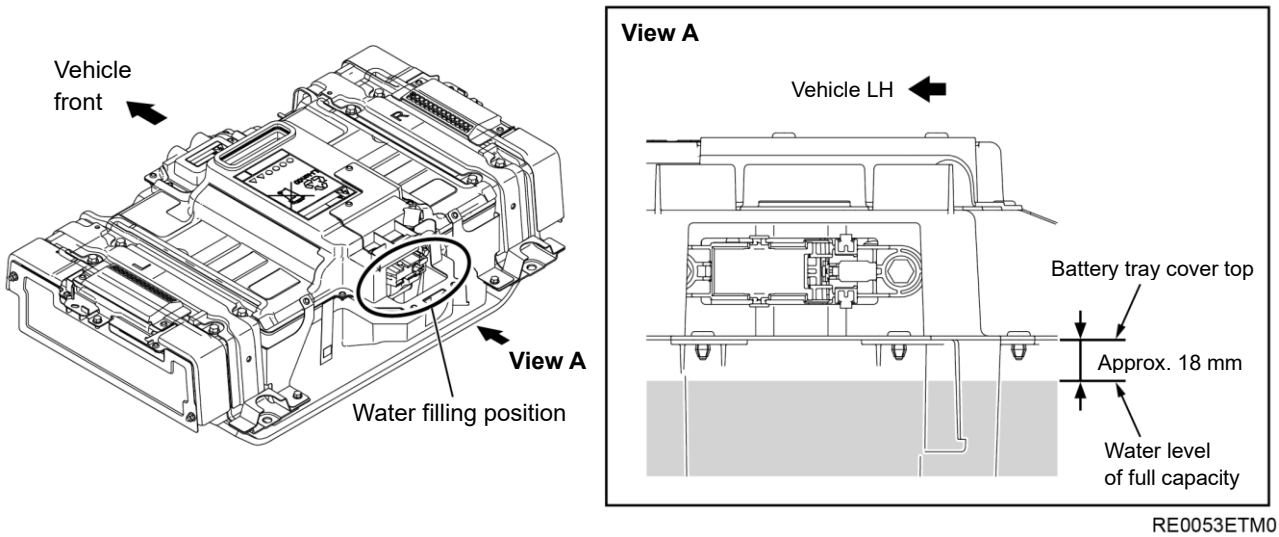

NOTE:

If the difference between the battery tray cover top and the water level is 18 mm or less, the inside of the battery tray cover can be judged to be full of water, so the difference between the battery tray cover top and the water level must be kept below 18 mm.

12) After filling the drive battery tray cover with water, leave the vehicle with the water kept full for approximately 12 days. During that time, hydrogen is electrochemically generated from water in the battery. Therefore, store the vehicle in outdoors where the ventilation is good.

CAUTION:

- Care should be taken to ensure that the depth of the hole does not exceed 40 mm.
- Waste water from the drive battery should be disposed properly as industrial waste in accordance with local regulations. As the waste water is an aqueous solution containing a tiny amount (1 to several ppm) of metals such as P, Li, etc., inform an industrial waste disposal contractor and request reliable treatment.

13) Using a drill of 10 mm diameter or less, drill a hole of about 35 mm depth vertically on the vehicle body at the drilling positions shown below to drain the water in the drive battery tray cover.

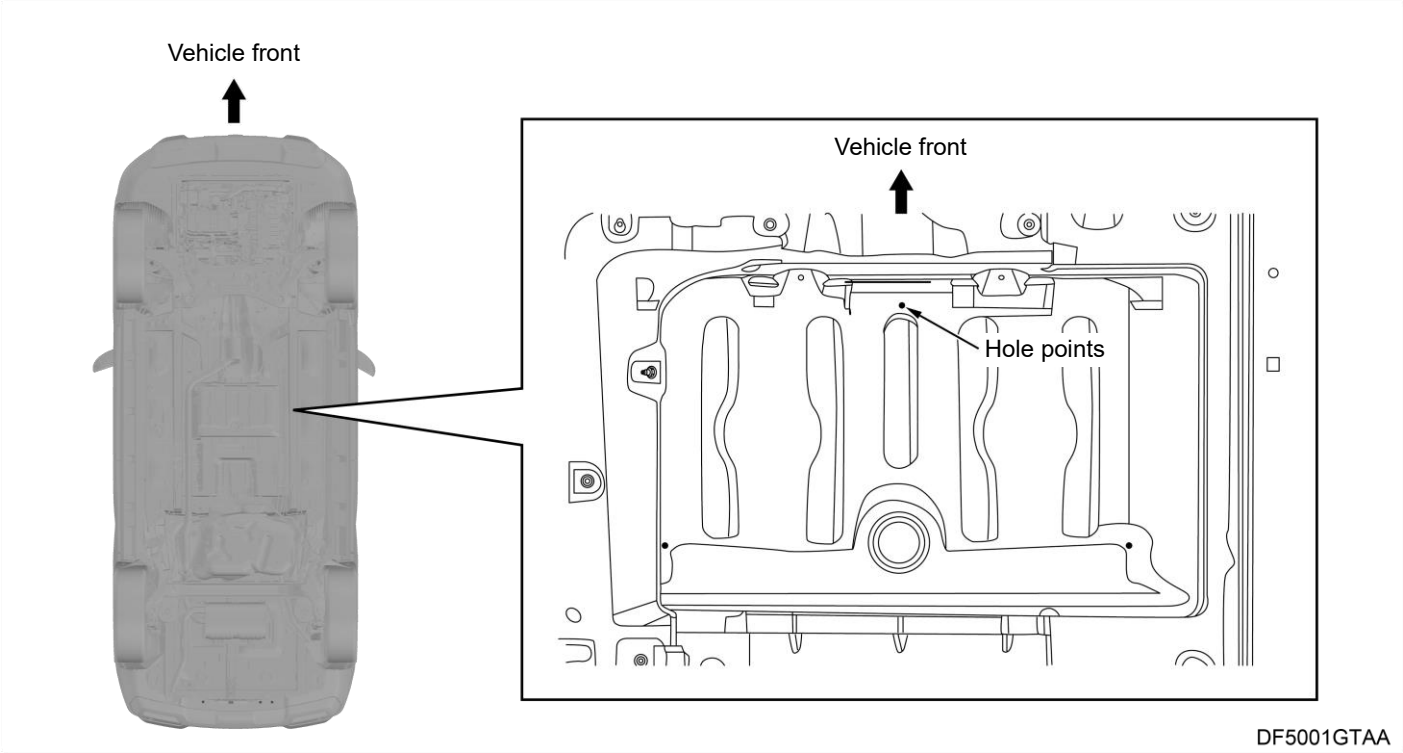

14) Dispose of the drive battery. (Dispose of the battery in the usual way.)

HIGH VOLTAGE WORK
IN PROGRESS!!
DANGER! DO NOT TOUCH!

HIGH VOLTAGE WORK
IN PROGRESS!!
DANGER! DO NOT TOUCH!

*Before any high voltage work commences, place this signboard on the roof of vehicle after folding on the dotted line.

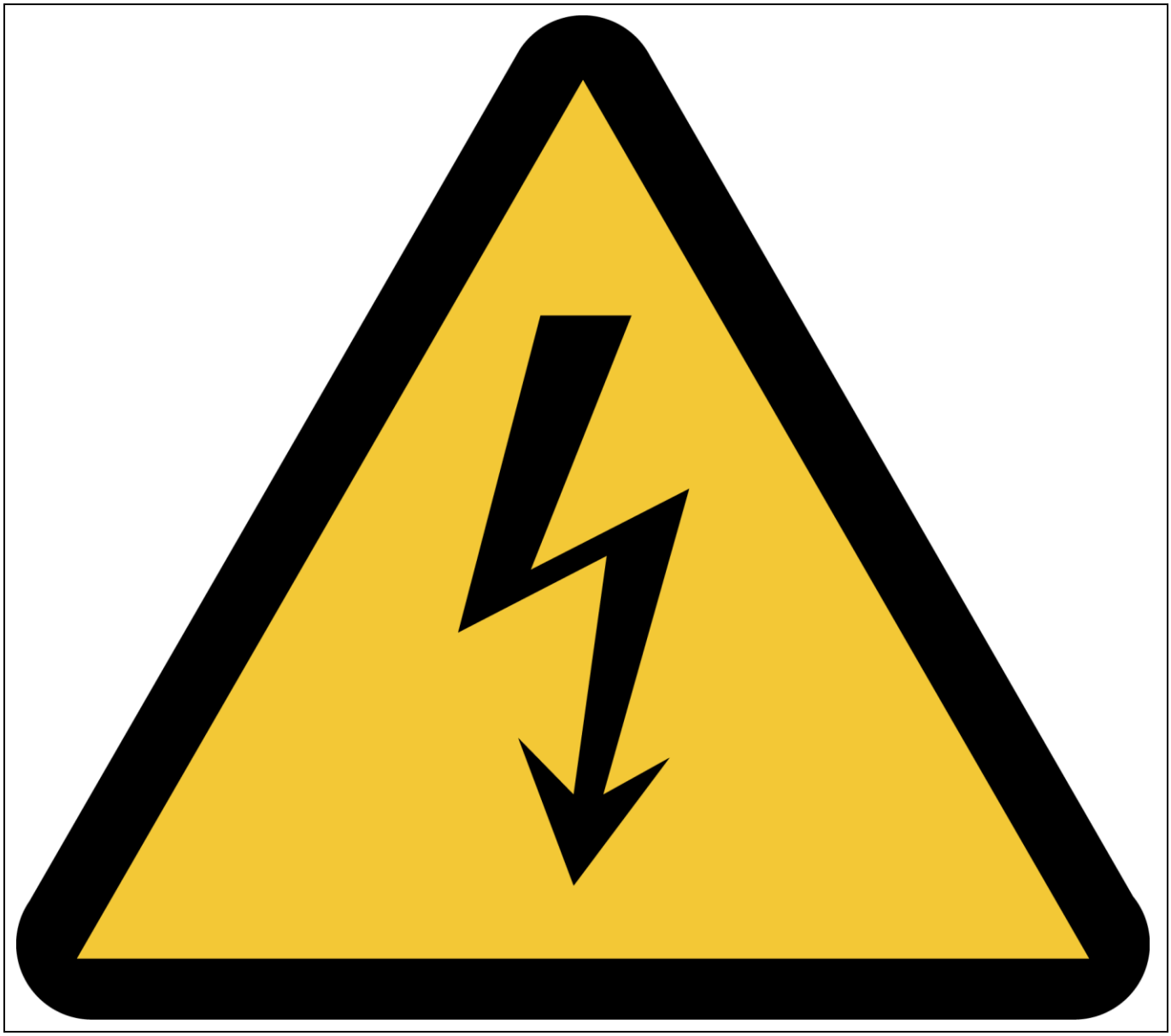

It is recommended that a warning sign (example provided above) is fixed to or on the vehicle during any emergency work on the vehicle. A sign that complies with local regulation should be used.

10. Explanation of pictograms used

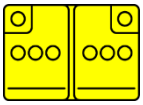	12V auxiliary battery		SRS unit	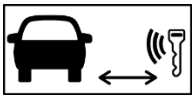	Keyless operation key distance
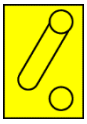	Power switch		Air bag inflator		Warning, Electricity
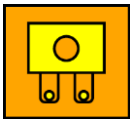	Fuse box disabling high voltage	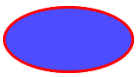	Airbag		Seat belt pretensioner
	High voltage wiring cable		Adjustment seat forward or backward		Warning, low temperature
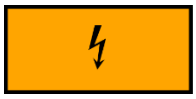	High voltage component		Adjustment seat height		Air-conditioning component
	Service plug		Steering wheel height adjustment		Lifting point
	Fuel tank		Use ABC powder to extinguish the fire		Use water to extinguish the fire
	Risk of damaging human health		Risk of flammability		Risk of an explosion
	Risk of corrosive material / substances				

MITSUBISHI MOTORS